HAUTAU PRIMAT

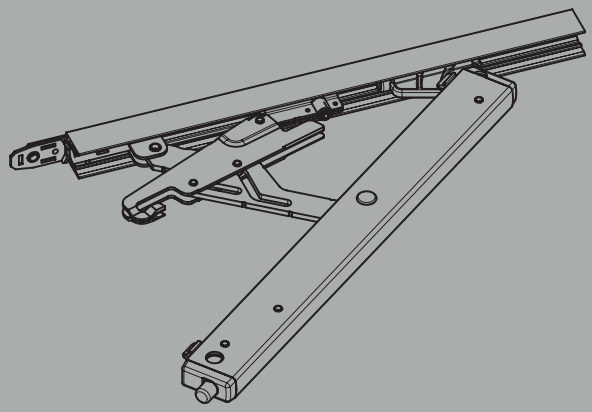

Hardware catalogue

TIMBER / PVC / ALUMINIUM

HAUTAU, a MACO Group company

Fanlight Opener
PRIMAT

PRIMAT-FL 190 for inward opening bottom hung windows

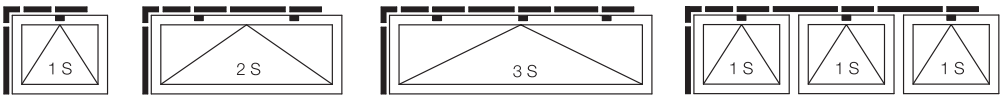

PRIMAT-FL 190 basic fitting

Page 8

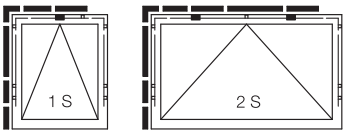

Additional locking ZV/F

Page 14

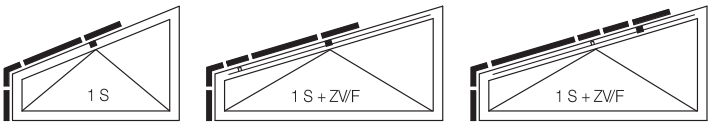

Window with top slant

Page 18

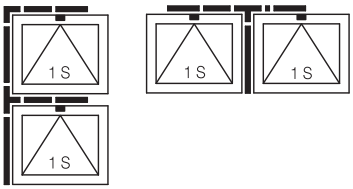

Corner for double-sash windows

Page 20

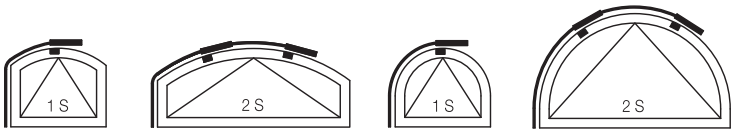

Flat arch window and round arch window

Page 22

PRIMAT-A for outward opening top hung windows

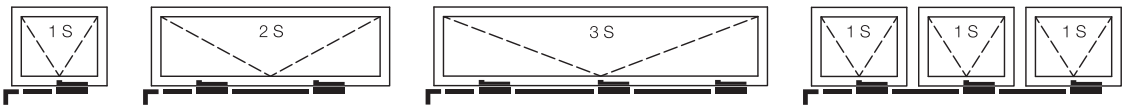

PRIMAT-A
Basic fitting

Page 24

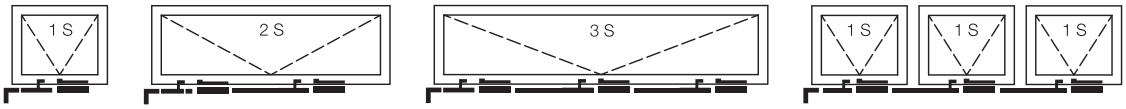

Additional locking ZV/A

Page 28

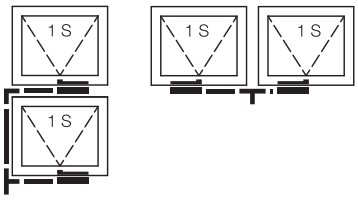

Corner for double-sash windows

Page 30

Transmissions

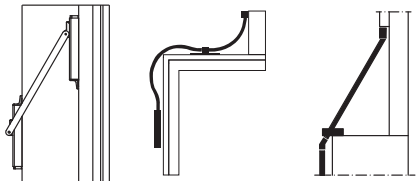

Transmission for curtain walling Page 32
Flexible transmission Page 34
Spindle gear transmissions Page 36

Spindle gears

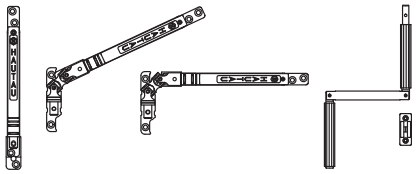

Spindle gears and crank rods
Page 40

Accessories

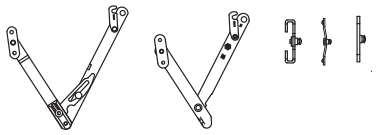

Security stays KSP and restrictors
Page 48

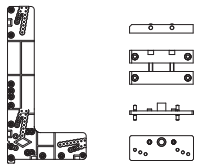

Jigs
Page 52

Drives

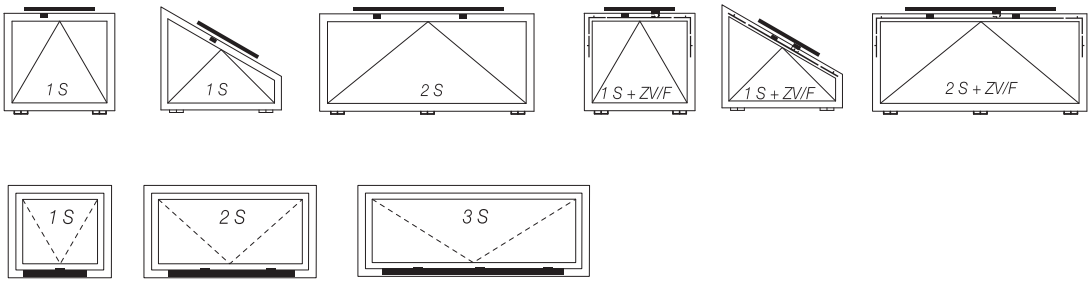

PRIMAT kompakt 190 / 300
Page 54

PRIMAT, the most important benefits:

PRIMAT-FL 190

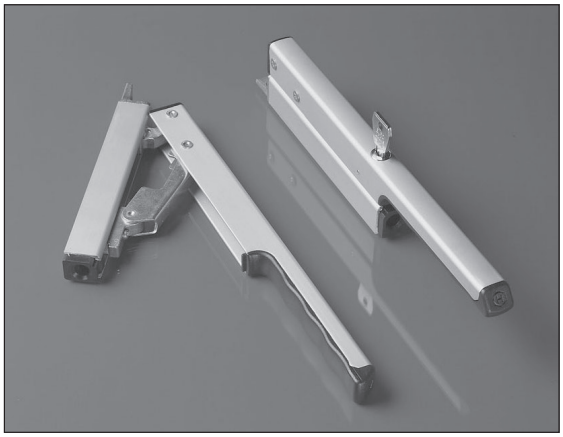

- **Glass weight up to 70 kg/m²** possible
- **Additional third locking inside the stay for increased contact pressure** (heat insulation regulations). This window locking mechanism is a lot better than that of common fanlight openers as the holding points between sash and frame are closer together.
- Smooth operation despite large opening width (190 mm)
- The **anti-dirt profiling** inside the stays ensures smooth running over a long period of time as well as a long lifespan.
- Lever with **ergonomic recessed grips** for more conveninent operation, also **lockable**
- Increased lever stroke for the proper functionality of an additional locking with mushroom cams installed inside the rebate
- Flexible corner can be used for windows with an angle of 90° to 135°

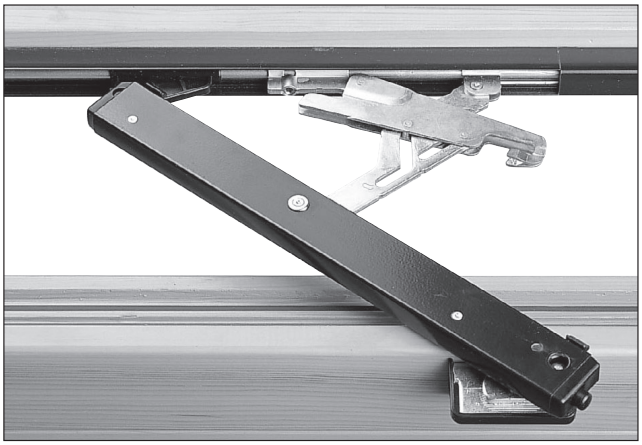

- **Visible parts made of aluminium**, funtional parts made of steel with surface finish HAUTAU-S^{plus} (chromed silver) for high anti-corrosion protection.
- Requires only 23 mm of space
- **Rod connection** to the corner without clamping screws, quick and permanently interlocking connection by simply hanging the rods
- **Universal sash bracket** with cover cap for all window materials, rebate 0 - 25 mm
- **No 45° section:** Alu cover profile with straight section and corner cover cap installed on the chain guide
- **Sash suspension with security knob**
- **Additional security:** An allen screw prevents the stay from un-authorized release

- **Easy installation:** stays and rods can be mounted from the front. Stay secured in the stay holder by coupling
- Opening stay with high closing pressure, automatic locking in closed position and stormproof fixing in open position
- Closing pressure adjustable on the sash bracket with simultaneous balancing of mounting inaccuracies
- Concealed fixing screws
- PVC rod guides with snappable locks
- Jigs for quick and easy assembly, universal right and left hand use on timber, PVC, and aluminium

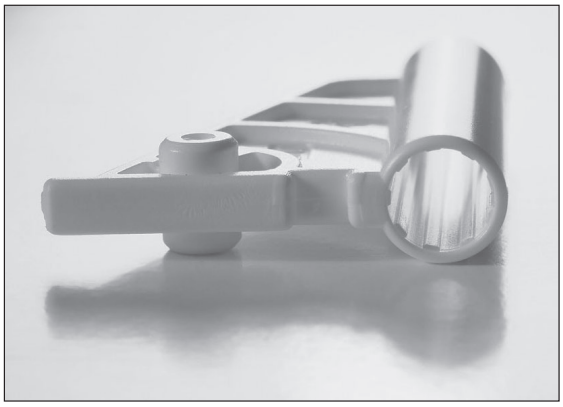

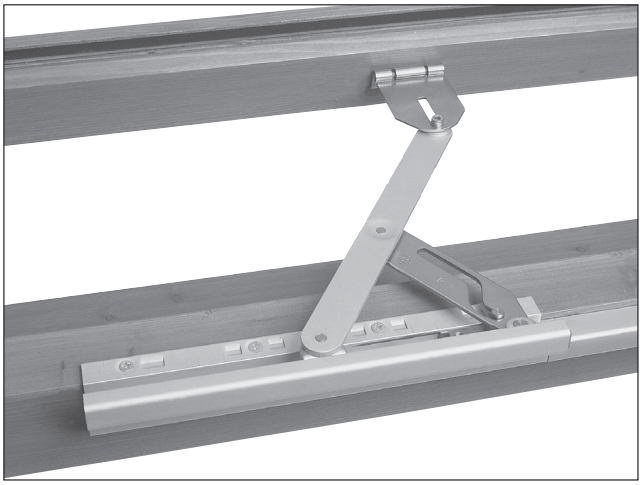

PRIMAT-A

- Elegant design, flat and modern structural shape (rods, cover profile, and lever same as PRIMAT-FL 190)
- **Large adjustable opening width:** 130 mm to approx. 170 mm
- three **sash brackets for** possible **recesses** of 0-75 mm; sash bracket on the pivot arm screwed on self-securingly (thread retention), locking pressure continuously adjustable
- Functional parts of the stay and the sask bracket made of stainless steel
- **Easy installation:** stays and rods can be mounted from the front; stay secured inside the stay holder by clamping screw; changing the stay position allows for right and left hand operation
- Jigs for quick and easy installation

Accessories

Additional lockings ZV/F – increased closing pressure for high tilt sashes, concealed inside the rebate or on the frame

You should always use lateral additional lockings for sash heights of 700 mm or greater.

Additional locking ZV/F

- Particularly well-suited for tall tilt sashes.
- No visible fitting parts - additional locking concealed inside the rebate
- Improved sealing and strong closing pressure for protection against driving rain and strong winds
- Improved security and burglar protection thanks to central locking system
- Despite the locking parts inside the rebate, it is still possible to install a catch stay and meet the requirements of the product liability law. The stay is screwed on to the lateral central lockings.
- Electronic closure control available on request.
- Also available for different locking systems when connected with special coupling parts.

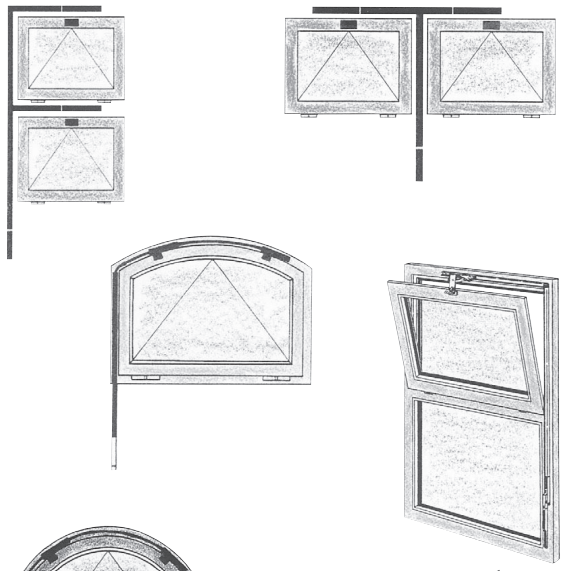

Flexible rod

for individual window constructions, suitable for round and flat arch windows or for use as a transmission.

- Elegant and safe; designed to withstand pressures of up to 600 N and towing forces of up to 1000 N
- Available in grey, white and black
- Particularly smooth operation, even for small radii
- Packing units complete with accessories, no additional parts for flat arch windows necessary
- Individual adjustability
- Easily adjustable transmission for fanlight openers with manual operation; also available with spindle gear and electric drive
- No more corner transmissions or rod cranks
- Quick and easy installation

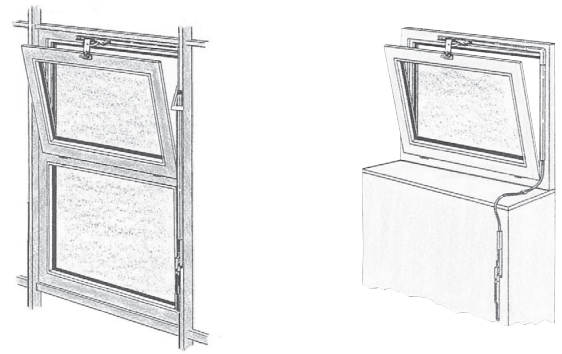

Transmission for curtain walling

- Transmission for post heights up to 200 mm
- Can be combined with PRIMAT-FL 190 or PRIMAT-A
- Considerable design benefits
- Easy installation with jig

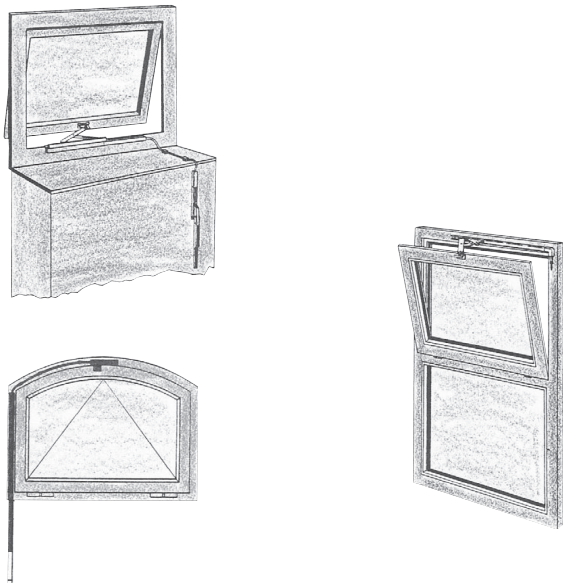

Spindle gears

- **Extremely small footprint:** cover profile only 16 mm, fastening area 18 mm wide
- **Concealed installation** below the Alu cover profile of the PRIMAT flat type opener
- **Simpler storage:** spindle gear galvanized, the colour design is determined by the Alu cover profile
- **Trapezoid thread with 6 mm pitch:** large stroke volume achieved with a minimum of crank revolutions

... for additional accessories such as corners for double sash windows, corners, and sash brackets for bevel windows or KSP and restrictors, refer to the following pages.

Range of application PRIMAT-FL 190

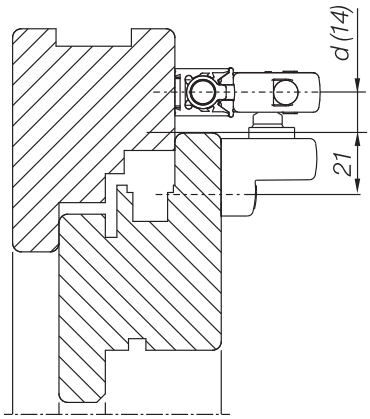

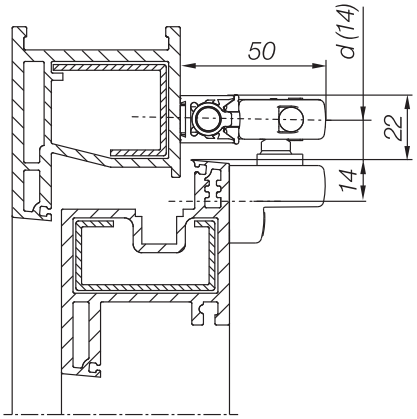

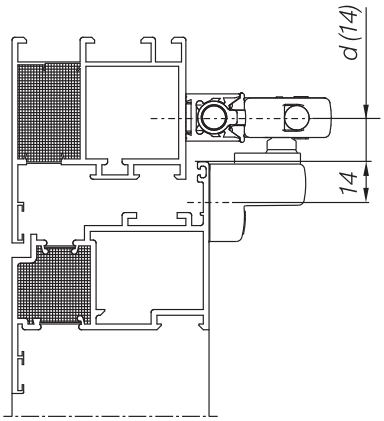

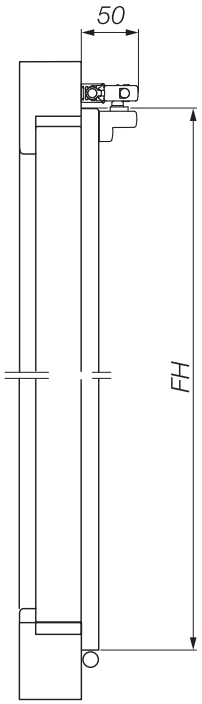

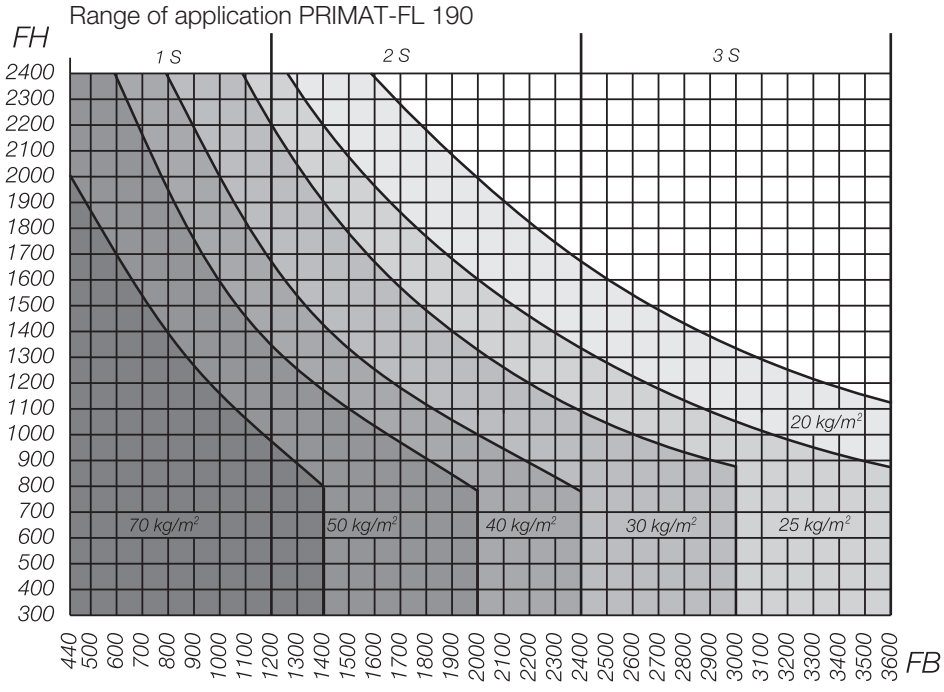

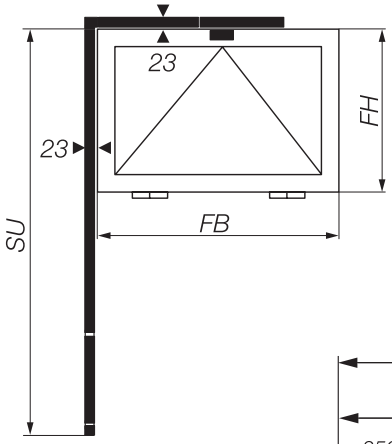

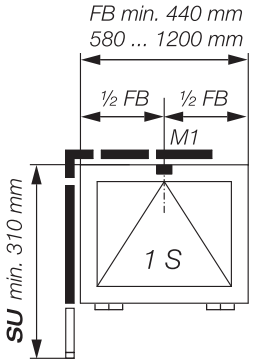

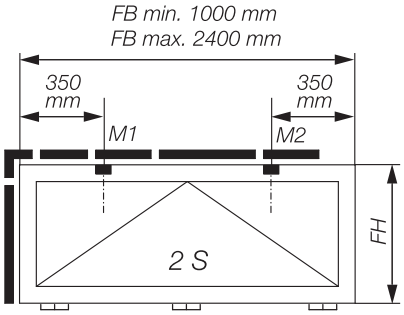

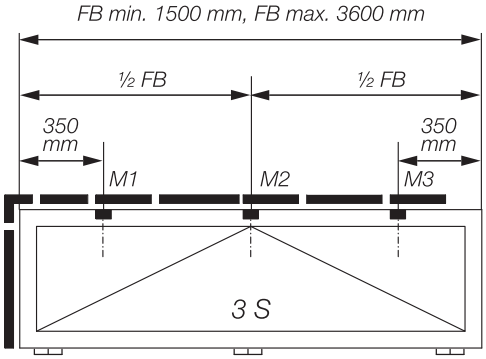

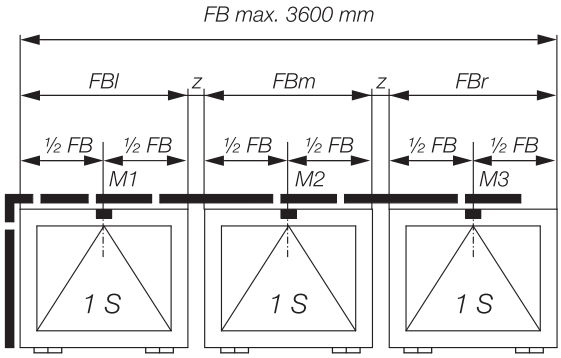

Range of application PRIMAT-FL 190

Sash width
at least 440 mm - max. 1200 mm — 1 stay
at least 1000 mm - max. 2400 mm — 2 stays
at least 1500 mm - max. 3600 mm — 3 stays

Glass weights* of up to 70 kg/m²
*weight for thickness of 1 mm ~ 2.5 kg/m²
does not apply unless the distance between the sash's gravity centre and the centre of rotation is 25 - 65 mm.

Sash height	space requirements	lever travel	opening width
200 mm or greater	23 mm	38 mm	approx. 110 mm
300 mm* or greater	23 mm	58 mm	approx. 190 mm

*Stock design

sash weight max. 80 kg
rod length: max. 3750 mm

Colour information PRIMAT-FL 190

	Stay	Cover profile	Lever	PVC corner cover caps
Design EV1	EV 1 ecru, anodized	EV 1 ecru, anodized	EV 1 ecru, anodized	black
Design white	white, coated RAL 9016	white, coated RAL 9016	white, coated RAL 9016	white
Design brown	brown coated RAL 8077	brown coated RAL 8077	brown coated RAL 8077	black
Design black	black, coated RAL 9005	black, coated RAL 9005	black, coated RAL 9005	black
Design medium bronze	C33, anodized	C33, anodized	C33, anodized	black
Design Niro look	anodized	anodized	anodized	black

Note: Cover caps colour matched, special colours available on request. Functional parts steel galvanized.
Rods made of high solid steel materials, polished galvanized.

Text for tender
Flat type opener PRIMAT-FL 190 for inward tilt sashes with additional third locking systems concealed inside the stay for optimal sash closing pressure. Opening width approx.190 mm. Stay, cover profile and lever made of aluminium in EV 1, white or black. Stay with automatic locking, detachable on the frame, stay attachment additionally secured by coupling.
Suspendable rods, adjustable universal sash bracket with end cap, sash release with security knob, cover profile without bevel cut with corner end cap. Functional parts made of steel with surface finish **HAUTAU-S**plus (chromed silver).
Rugged Alu lever with ergonomic recessed grips.

Order details for custom made version
1. Measure SU = rod length between upper edge of the sash to the lower edge of the lever (minimum measure 310 mm)
2. Measure B = sash width (440 - 3600 mm)
3. Measure H = sash height (minimum measure 200 mm)
4. Determine the number of stays
5. Sash bracket type = universal sash bracket or screw sash bracket
6. Lever position = left or right (only necessary for special designs)
7. Measure d = outer sash to the middle of the rod (only necessary for measures other than 14 mm)
8. Measure Bl, Bm, Br, z = 2 or 3 sashes
9. Profile system = timber, PVC, steel or aluminium windows
10. Colour = EV 1, white (RAL 9016) or black (RAL 9005)

Note:
In combination with inward and outward tilt sashes you will also need **restrictors** on top of the fitting, which will limit the sash's tilt position when the opening stay is released (catch position). The catch position is slightly wider than the width of the opening stay.

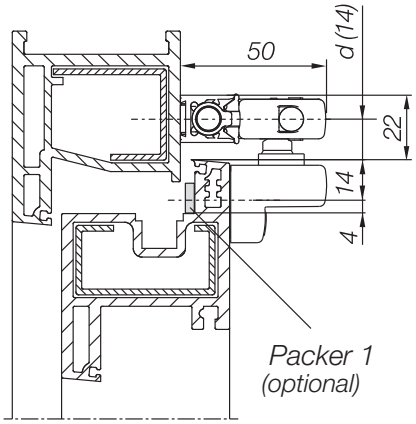

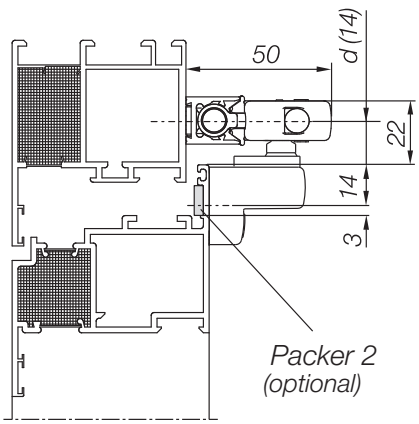

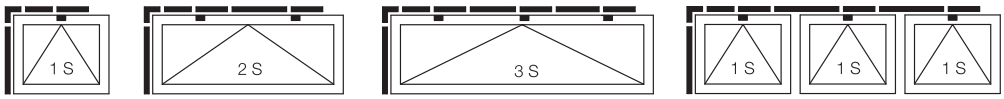

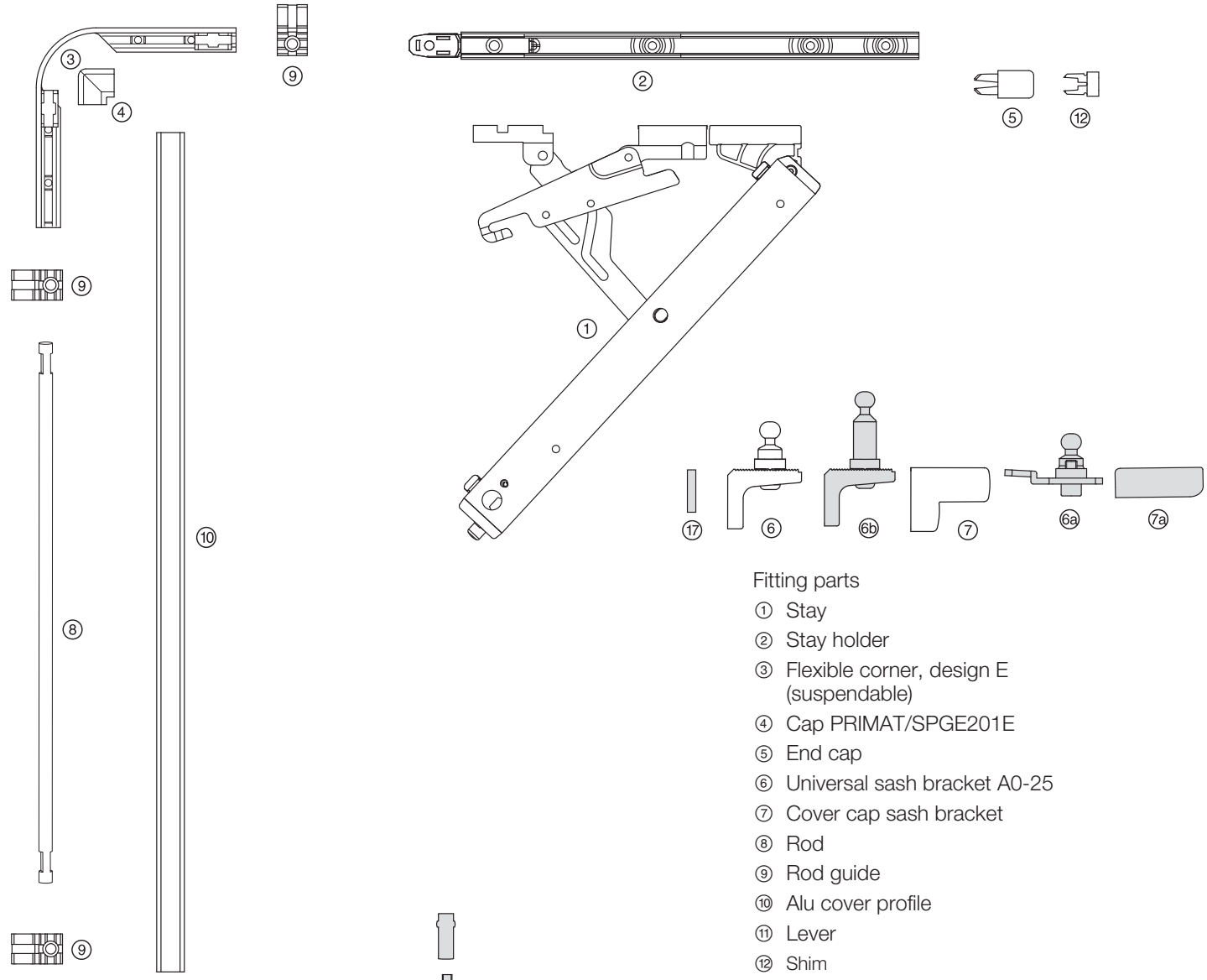

Fitting parts

① Stay
② Stay holder
③ Flexible corner, design E (suspendable)
④ Cap PRIMAT/SPGE201E
⑤ End cap
⑥ Universal sash bracket A0-25
⑦ Cover cap sash bracket
⑧ Rod
⑨ Rod guide
⑩ Alu cover profile
⑪ Lever
⑫ Shim

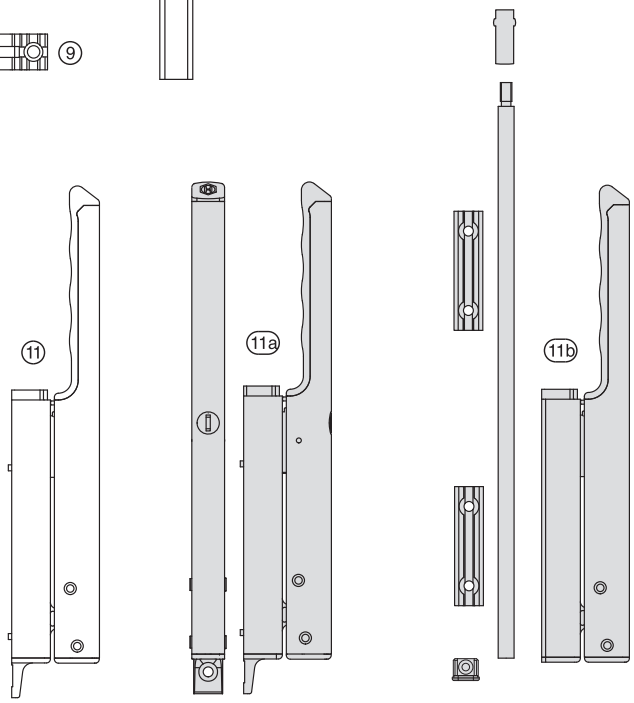

Optional:

⑥a Top mounted sash bracket A14-20
⑥b Sash bracket AH0-25 timber window
⑦a Cover cap for top mounted sash bracket A14-20
⑪a Lever, lockable
⑪b Lever, pivoting
⑬ Security stay KSP
⑭ Restrictor
⑰ Packer 1 or 2

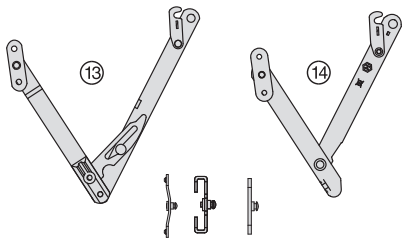

Fitting parts PRIMAT-FL 190

Packing units	EV 1	white	brown	black	medium bronze	Niro look
			see the following page			

Individual parts		EV 1	white	brown	black	medium bronze	Niro look
① Stay		170525	170528	171227	170534	170531	169481
② Stay holder		168452	168455	171230	168449	168458	169484
③ Flexible corner, design E = suspendable		196538	196538	196538	196538	196538	196538
④ Cap PRIMAT/SPGE201E		211546	211549	211546	211546	211546	211546
⑤ End cap		172840	173509	172840	172840	172840	172840
⑥ Universal sash bracket A0-25		172083	172083	172083	172083	172083	172083
⑦ Cover cap for universal sash bracket A0-25		195878	195872	195875	195875	195881	195875
⑧ Rod 8 mm Ø, design E	L = 1000 mm	108041	108041	108041	108041	108041	108041
	L = 2000 mm	108044	108044	108044	108044	108044	108044
	L = 2500 mm	108047	108047	108047	108047	108047	108047
	L = 3000 mm	108050	108050	108050	108050	108050	108050
	L = 3750 mm	108053	108053	108053	108053	108053	108053
⑨ Rod guide		176337	176337	176337	176337	176337	176337
⑩ Alu cover profile	L = 2000 mm	168869	168872	168875	168881	170143	168878
	L = 3000 mm	168839	168842	168845	168851	170146	168848
⑪ Lever	stroke 58 mm	171035	171038	190219	171044	171041	171047
	stroke 38 mm	173110	173113	228562	173116	170140	170966
⑪a Lever, lockable	stroke 58 mm	171050	171053	228565	171059	171056	171062
⑪b Lever, pivoting	stroke 58 mm	168950	168953	228568	169667	172035	169520
⑥a Top mounted sash bracket A14-20		173266	173266	173266	173266	173266	173266
⑦a Cover cap for top mounted sash bracket A14-20		127904	127889	127901	127901	127901	127901
⑥b Sash bracket AH0-25 timber window		217482	217482	217482	217482	217482	217482
⑫ Shim		127907	127907	127907	127907	127907	127907

Bulk pack	EV 1	white	brown	black	medium bronze	Niro look
			see the following page			

Accessories	
⑬ KSP stays	see page 48/49
⑭ Restrictors	see page 50/51
Sleeve 8/8 mm (no ill.)	107171
⑰ Packer 1	108014
⑰ Packer 2	108017
Installation instructions PRIMAT-FL 190 (complete)	184656

Fitting parts PRIMAT-FL 190 continued

Packing units	EV 1	white	brown	black	medium bronze	Niro look
Basic carton PRIMAT-FL 190, design E, with universal sash bracket A0-25 ① ② ③ ④ ⑤ ⑥ ⑦ ⑨ ⑪	173002	173005	190213	173008	170170	176529
Basic carton PRIMAT-FL 190, design E, with timber sash bracket AH 0-25 ① ② ③ ④ ⑤ 6b ⑦ ⑨ ⑪	236246	236249	236252	-	-	-
Basic carton PRIMAT-FL 190, design E, with top mounted sash bracket A14-20 ① ② ③ ④ ⑤ 6a 7a ⑨ ⑪	173020	173023	228814	173026	170164	176532
Additional carton PRIMAT-FL 190 with universal sash bracket A0-25 ① ② ⑥ ⑦ ⑨ ⑫	173056	173059	190216	173062	170167	176535
Additional carton PRIMAT-FL 190 with timber sash bracket AH0-25 ① ② 6b ⑦ ⑨ ⑫	234862	234865	234868	234871	234874	-
Additional carton PRIMAT-FL 190 with top mounted sash bracket A14-20 ① ② 6a 7a ⑨ ⑫	173074	173077	228817	173080	170161	176538
Additional carton PRIMAT-FL 190 stay with release protection with universal sash bracket A0-25	173092	173095	228820	173098	170176	176541
Additional carton PRIMAT-FL 190 without sash bracket ① ② ⑨ ⑫	169544	169547	228823	169550	170179	176547
Additional carton PRIMAT-FL 190 for bevel windows with corner sash bracket AS 0-25 ① ② 6c ⑨ ⑫	173083	173086	228826	173089	170173	176541
Carton with lever, stroke 58 mm ⑪	171035	171038	190219	171044	171041	171047
Carton with lever, stroke 38 mm ⑪	173110	173113	228562	173116	170140	170966
Carton with lever, lockable, stroke 58 mm 11a	171050	171053	228565	171059	171056	171062
Carton with lever, pivoting, stroke 58 mm 11b	168950	168953	228568	169667	172035	169520
Bag with corner PRIMAT-FL 190 with accessories ③ ④ ⑨	228109	228106	228109	228109	228109	228109

Bulk pack	EV 1	white	brown	black	medium bronze	Niro look
Lever, stroke 58 mm, pack of 25 ③ ④ ⑨ ⑪	169037	169040	190222	173146	170182	-
Stays with universal sash bracket A0-25, pack of 25 ① ② ⑥ ⑦ ⑨ ⑫	173128	173131	190225	173134	170185	-
Stays with timber sash bracket AH0-25, pack of 25 ① ② 6b ⑦ ⑨ ⑫	241837	241840	241843	241846	241849	-
Stays with top mounted sash bracket A14-20, pack of 25 ① ② 6a 7a ⑨ ⑫	173137	173140	228829	173143	170188	-
Cover profiles, pack of 20 ⑩ L = 6000 mm	172316	172322	190228	172328	172325	-

Contents of the packing units PRIMAT-FL 190

Packing units	
Basic carton PRIMAT-FL 190	1 stay with stay holder, 1 sash bracket with cover cap, 1 corner, 3 rod guides, 1 end cap, 1 lever
Additional carton PRIMAT-FL 190	1 stay with stay holder, 1 sash bracket with cover cap, 1 rod guide, 1 shim
Additional carton PRIMAT-FL 190 for bevel windows	1 stay with stay holder, 1 bevel window sash bracket, 1 rod guide, 1 shim, 1 end cap
Additional carton PRIMAT-FL 190	1 stay with stay holder, 1 rod guide, 1 shim
Carton with lever	1 lever
Carton with lever, lockable	1 lever
Carton with lever, pivoting	1 pivoting lever (with mounting accessories)
Bag with flexible corner	1 corner, 2 rod guides, corner cover caps
Bag with corner for double-sash windows	1 corner, 3 rod guides, coupling bar
Bag with additional locking ZV/F	1 coupling, 1 cover piece, 2 rod guides
Bulk pack, pack of 25, lever	25 levers, 25 chain guides, 50 rod guides, 25 end caps stay
Bulk pack, pack of 25, stays with universal sash bracket A0-25	25 stays with stay holder, 25 universal sash brackets with cover caps, 25 rod guides, 25 shims
Bulk pack, pack of 25, stays with top mounted sash bracket A14-22	25 stays with stay holder, 25 top mounted sash brackets with cover caps, 25 rod guides, 25 shims
Bulk pack, pack of 20, cover profiles	20 profiles, each 6,000 mm long

HAUTAU

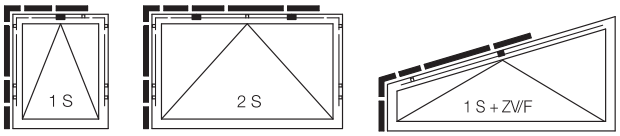

SKG

SKH

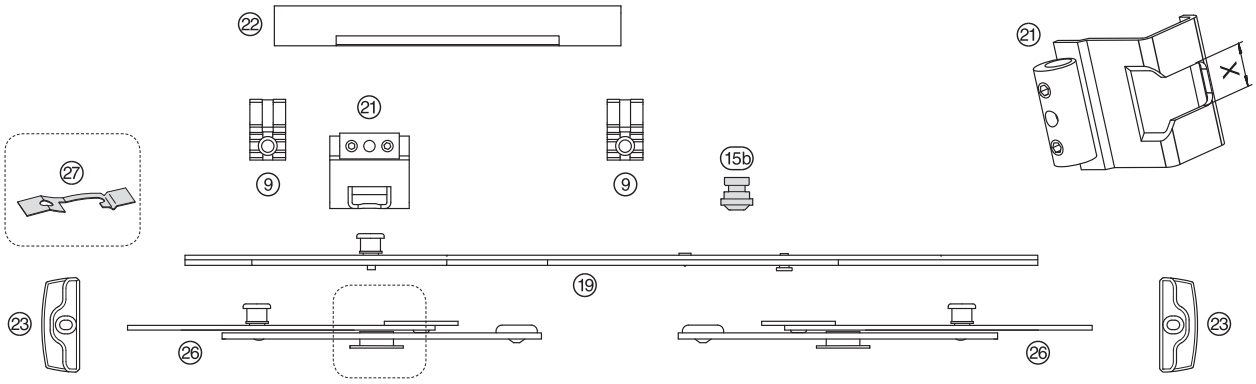

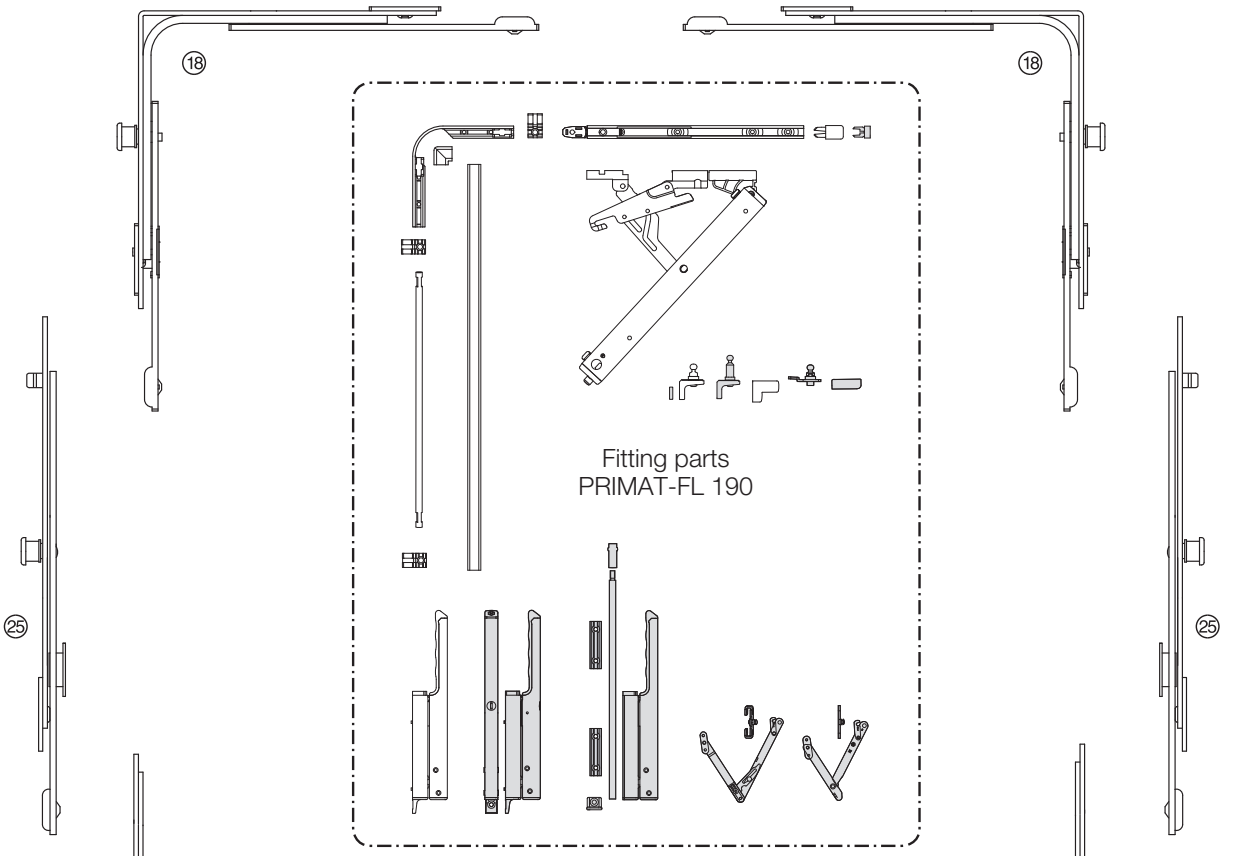

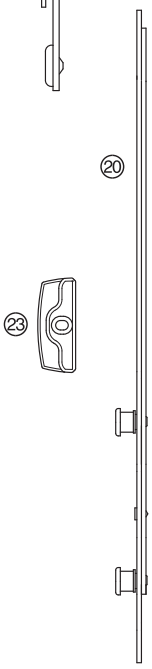

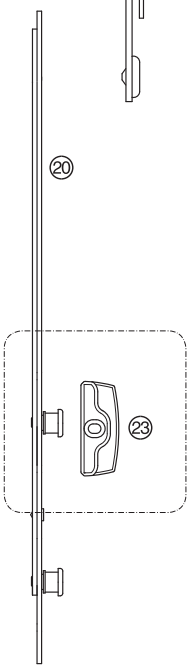

Fitting parts

- ⑨ Rod guide
- ⑮b Sleeve 10,0 x 10,2
- ⑱ Corner
- ⑱a Corner ES 2 (no ill.)
- ⑲ Connecting rod ZV/F
- ⑳ Central locking
- ㉑ Coupling part ZV/F
- ㉒ Alu cover profile ZV/F
- ㉓ Striker
- ㉓a Security striker
- ㉖ End locking
- ㉕ Linkage 400

Optional:

- ㉗ Catch spring (no ill.) for windows with top slant and side hung window

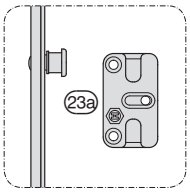

Security striker and steel mushroom cams for **SKG**-certified design.

Use the lockable design with lever operation.

Additional locking ZV/F

units/strikers/individual parts		EV 1	white	brown	black	medium bronze	Niro look	Lock Packing cams
Accessories ZV/F (coupling parts) ㉑ ㉒ ⑨	measure x = 8,3 mm	225316	225319	228349	225322	225325	225328	-
Connecting rod ZV/F ⑲	width = 440-620 mm (also RC2)	221190	221190	221190	221190	221190	221190	0
HAUTAU-S^{plus}	width = 621-900 mm (also RC2)	221190	221190	221190	221190	221190	221190	0
1 unit	width = 901-1200 mm (also RC2)	221193	221193	221193	221193	221193	221193	0
	width = 1201-1600 mm	221199	221199	221199	221199	221199	221199	1
	width = 1601-2000 mm	221202	221202	221202	221202	221202	221202	2
	width = 2001-2400 mm	221205	221205	221205	221205	221205	221205	2
Central locking for additional	height = 701-1100 mm	221232	221232	221232	221232	221232	221232	1
locking ZV/F ⑳	height = 1101-1500 mm	221235	221235	221235	221235	221235	221235	1
HAUTAU-S^{plus}	height = 1501-1900 mm	221238	221238	221238	221238	221238	221238	1
1 unit	height = 1901-2400 mm	221241	221241	221241	221241	221241	221241	1
Linkage 200 URZ ㉔	height = 500-700 mm							
1 unit HAUTAU-S^{plus}	(FB 440 - 620)	217668	217668	217668	217668	217668	217668	1
Linkage 400 URZ ㉕	height = 710-2400 mm							
1 unit HAUTAU-S^{plus}	(FB 621 - 2400)	227959	227959	227959	227959	227959	227959	1
Linkage ZV/F ㉖								
1 unit HAUTAU-S^{plus}	FH = 621 - 2400 mm	215571	215571	215571	215571	215571	215571	1
Corner ZV/F ⑱								
1 unit HAUTAU-S^{plus}	FH = 501 - 2400 mm	215598	215598	215598	215598	215598	215598	1
Corner ZV/F ES 2 ⑱ⓐ								
1 unit HAUTAU-S^{plus}	FH = 501 - 2400 mm	215595	215595	215595	215595	215595	215595	2
Striker ㉓		see striker list ATRIUM HKS® (Internet)						
Security striker (design RC2/SKG) ㉓ⓐ		see striker list ATRIUM HKS® (Internet)						

Individual parts		EV 1	white	brown	black	medium bronze	Niro look
㉑ Coupling part ZV/F	measure x = 8,3 mm handle, top	223950	223950	223950	223950	223950	223950
㉒ Alu cover profile ZV/F		171726	171729	228346	171732	170212	169475
⑨ Rod guide		176337	176337	176337	176337	176337	176337
㉗ Catch spring for End locking/bevel windows		192574	192574	192574	192574	192574	192574
⑮ⓑ Sleeve 10,0 x 10,2		200543	200543	200543	200543	200543	200543

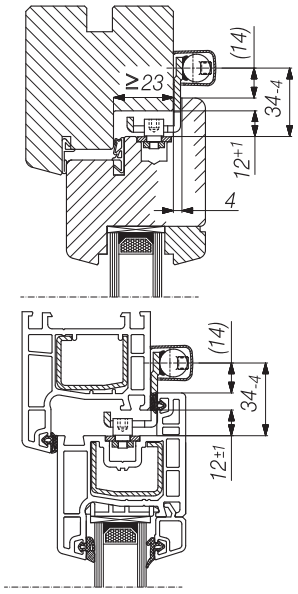

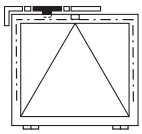

FB 621 ... 2400 mm
FH at least 300 mm
top coupling ZV/F

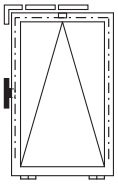

FB 440 ... 620 mm
FH at least 500 mm
lateral coupling ZV/F

Fitting composition

Example for 1 tilt sash, white, RC2, horizontal and straight, FB 1000 m/FH 1500 mm

1 x Bag of additional lockings ZV/F (measure x = 8.3 mm)
1 x Connecting rod 221193
2 x Linkage 400 227959
2 x Central locking 221235
2 x Corner 215595
8 x Striker, profile related

You will need the following additional fitting parts:

1. Basic carton PRIMAT-FL 190
2. Rod 8 mm Ø
3. Alu cover profile
4. KSP stay or restrictor 113

Order matrix ZV/F-URZ

			FB 440 - 620					FB 621 - 900						FB 901 - 1200		
			FH 500 - 700	FH 701 - 1100	FH 1011 - 1500	FH 1501 - 1900	FH 1901 - 2400	FH 300 - 500	FH 501 - 700	FH 701 - 1100	FH 1101 - 1500	FH 1501 - 1900	FH 1901 - 2400	FH 300 - 500	FH 501 - 700	FH 701 - 1100
Bag of additional lockings ZV/F (coupling parts) ㉑ ㉒ ⑨ measure x = 8.3 mm	225316 (EV1) 225319 (white) 228349 (brown) 225322 (black) 225325 (medium bronze) 225328 (Niro-Look)		1	1	1	1	1	1	1	1	1	1	1	1	1	1
Connecting rod ZV/F ⑲		221190	1	1	1	1	1	1	1	1	1	1	1	-	-	-
		221193	-	-	-	-	-	-	-	-	-	-	-	1	1	1
		221199	-	-	-	-	-	-	-	-	-	-	-	-	-	-
		221202	-	-	-	-	-	-	-	-	-	-	-	-	-	-
		221205	-	-	-	-	-	-	-	-	-	-	-	-	-	-
Central locking ⑳		221232	-	2	-	-	-	-	-	-	-	-	-	-	-	-
		221235	-	-	2	-	-	-	-	-	2	-	-	-	-	-
		221238	-	-	-	2	-	-	-	-	-	2	-	-	-	-
		221241	-	-	-	-	2	-	-	-	-	-	2	-	-	-
Linkage 200 ㉔		217668	1	-	-	-	-	-	-	-	-	-	-	-	-	-
Linkage 400 ㉕		227959	-	-	-	-	-	-	-	2	2	2	2	-	-	2
End locking ㉖		215571	-	-	-	-	-	2	-	-	-	-	-	2	-	-
Corner ⑱		215598	2	2	2	2	2	-	2	2	2	2	2	-	2	2
Corner ES 2 (optional with RC2 + SKG) ⑱a		215595	2	2	2	2	2	2	2	2	2	2	2	2	2	2
Striker standard ㉓		see list***	2	4	4	4	4	2	2	4	6	6	6	2	2	4
Security Striker (optional with RC2 + SKG)* ㉓a		see list***	4	6	6	6	6	4	4	6	8	8	8	2	4	6
KSP size 1	1 pair	140927	-	-	-	-	-	1	-	-	-	-	-	1	-	-
KSP size 2	1 pair	140930	-	-	-	-	-	-	-	-	-	-	-	-	-	-
KSP size 2	right or left	117452 / 117470	1	-	-	-	-	-	-	-	-	-	-	-	-	-
Restrictor 113, Spw. 250 mm	left	159630	-	1	1	1	1	-	-	-	1	1	1	-	-	-
Restrictor 113, Spw. 250 mm	right	159627	-	-	1	1	1	-	-	-	1	1	1	-	-	-

Note:
* max. 6 strikers under pressure (lateral), on top stay locking, more than 6 security strikers in neutral position!
** bush 10.0 x 10.2 ⑮b required
*** striker list ATRIUM HKS® (Internet)

op = optional; Spw. = span width

HAUTAU

FB 901 - 1200			FB 1201 - 1600						FB 1601 - 2000						FB 2001 - 2400						bevel windows			
FH 1101 - 1500	FH 1501 - 1900	FH 1901 - 2400	FH 300 - 500	FH 501 - 700	FH 701 - 1100	FH 1101 - 1500	FH 1501 - 1900	FH 1901 - 2400	FH 300 - 500	FH 501 - 700	FH 701 - 1100	FH 1101 -1500	FH 1501 - 1900	FH 1901 - 2400	FH 300 - 500	FH 501 - 700	FH 701 - 1100	FH 1101 - 1500	FH 1501 - 1900	FH 1901 - 2400	Bs 621 - 900	Bs 901 - 1200	Bs 1201 - 1600	Bs 1601 - 2000
1	1	1	1	1	1	1	1	1	1	1	1	1	1	1	1	1	1	1	1	1	1	1	1	
-	-	-	-	-	-	-	-	-	-	-	-	-	-	-	-	-	-	-	-	-	1	-	-	-
1	1	1	-	-	-	-	-	-	-	-	-	-	-	-	-	-	-	-	-	-	-	1	-	-
-	-	-	1	1	1	1	1	1	-	-	-	-	-	-	-	-	-	-	-	-	-	-	1	-
-	-	-	-	-	-	-	-	-	1	1	1	1	1	1	-	-	-	-	-	-	-	-	-	1
-	-	-	-	-	-	-	-	-	-	-	-	-	-	-	1	1	1	1	1	1	-	-	-	-
-	-	-	-	-	-	-	-	-	-	-	-	-	-	-	-	-	-	-	-	-	-	-	-	-
2	-	-	-	-	-	2	-	-	-	-	-	2	-	-	-	-	-	2	-	-	-	-	-	-
-	2	-	-	-	-	-	2	-	-	-	-	-	2	-	-	-	-	-	2	-	-	-	-	-
-	-	2	-	-	-	-	-	2	-	-	-	-	-	2	-	-	-	-	-	2	-	-	-	-
-	-	-	-	-	-	-	-	-	-	-	-	-	-	-	-	-	-	-	-	-	-	-	-	-
2	2	2	-	-	2	2	2	2	-	-	2	2	2	2	-	-	2	2	2	2	-	-	-	-
-	-	-	2	-	-	-	-	-	2	-	-	-	-	-	2	-	-	-	-	-	2	2	2	2
2	2	2	-	2	2	2	2	2	-	2	2	2	2	2	-	2	2	2	2	2	-	-	-	-
2	2	2	2	2	2	2	2	2	2	2	2	2	2	2	2	2	2	2	2	2	-	-	-	-
6	6	6	2	3	5	5	6	6	2	4	6	6	6	6	3	4	6	6	6	6	2	2	2	3
8	8	8	2	5	7	7	9	9	2	6	8	10	10	10	3	6	8	10	10	10	-	-	-	-
-	-	-	1	-	-	-	-	-	1	-	-	-	-	-	1	-	-	-	-	-	-	-	-	-
-	-	-	-	-	-	-	-	-	-	-	-	-	-	-	-	-	-	-	-	-	-	-	-	-
-	-	-	-	-	-	-	-	-	-	-	-	-	-	-	-	-	-	-	-	-	-	-	-	-
1	1	1	-	1	1	1	1	1	-	1	1	1	1	1	-	1	1	1	1	1	op	op	op	op
1	1	1	-	1	1	1	1	1	-	1	1	1	1	1	-	1	1	1	1	1	op	op	op	op

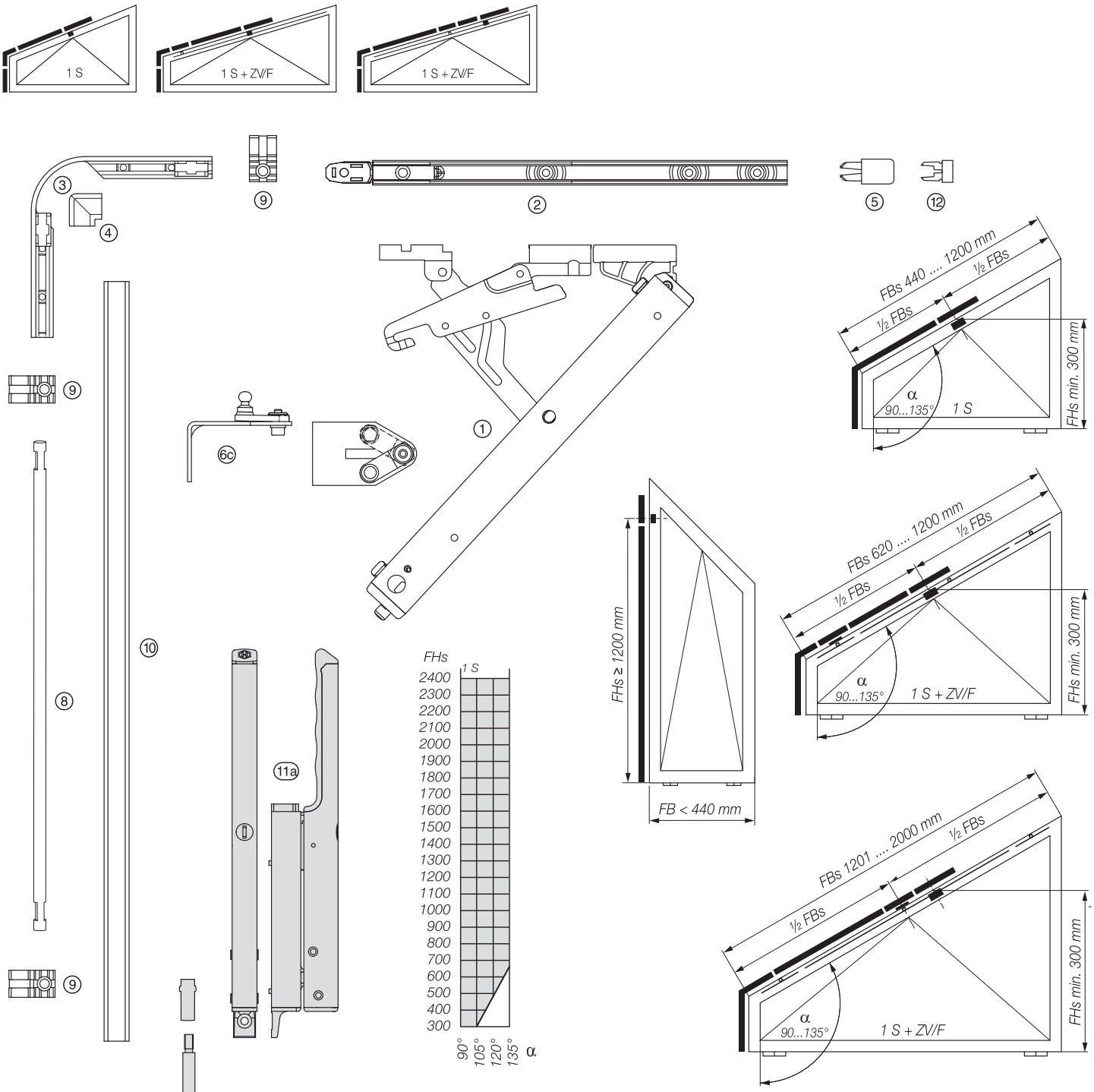

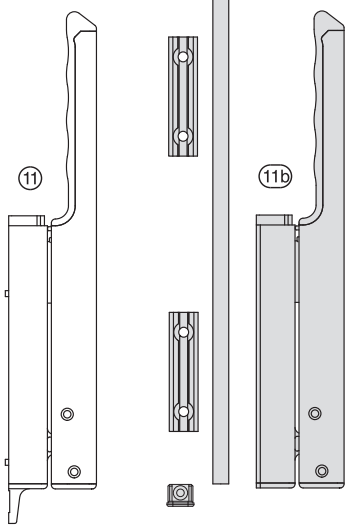

Fitting parts

① Stay
② Stay holder
③ Flexible corner
④ Cap PRIMAT/SPGE201E
⑤ End cap
6c Corner sash bracket AS0-25
⑧ Rod
⑨ Rod guide
⑩ Alu cover profile
⑪ Lever

Optional:

11a Lever, lockable
11b Lever, pivoting
⑫ Shim
⑬ Security stay KSP
⑭ Restrictor

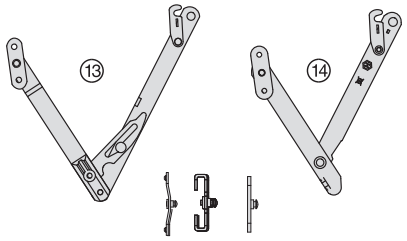

Window with top slant

Packing units	EV 1	white	brown	black	medium bronze	Niro look
Additional carton PRIMAT-FL 190 for bevel windows with corner sash bracket AS0-25 ① ② ⑤ ⑥c ⑨ ⑫	173083	173086	228826	173089	170173	176544
Bag with additional locking ZV/F ㉑ ㉒ ⑨ (optional)	225316	225319	228349	225322	225325	225328
Bag with corner PRIMAT-FL190 with Accessories ③ ④ ⑨	228109	228106	228109	228109	228109	228109
Carton with lever, stroke 58 mm ⑪	171035	171038	190219	171044	171041	171047
Carton with lever, stroke 38 mm	173110	173113	228562	173116	170140	170966
Carton with lever, lockable, stroke 58 mm ⑪a	171050	171053	228565	171059	171056	171062
Carton with lever, pivoting, stroke 58 mm ⑪b	168950	168953	228568	169667	172035	169520

Individual parts		EV 1	white	brown	black	medium bronze	Niro look
① Stay		170525	170528	171227	170534	170531	169481
② Stay holder		168452	168455	171230	168449	168458	169484
③ Flexible corner PRIMAT-FL 190 complete		196538	196538	196538	196538	196538	196538
④ Cover cap PMAT/SPGE 201E		211546	211549	211546	211546	211546	211546
⑫ Shim		127907	127907	127907	127907	127907	127907
⑥c Corner sash bracket AS0-25		172334	172337	228832	172340	170203	172340
⑧ Rod 8 mm Ø, design E	L = 1000 mm	108041	108041	108041	108041	108041	108041
	L = 2000 mm	108044	108044	108044	108044	108044	108044
	L = 2500 mm	108047	108047	108047	108047	108047	108047
	L = 3000 mm	108050	108050	108050	108050	108050	108050
	L = 3750 mm	108053	108053	108053	108053	108053	108053
⑨ Rod guide		176337	176337	176337	176337	176337	176337
⑩ Alu cover profile	L = 2000 mm	168869	168872	168875	168881	170142	168878
	L = 3000 mm	168839	168842	168845	168851	170146	168848
⑤ End cap		172840	173509	172840	172840	172840	172840

Accessories	
⑬ KSP stays	see page 48/49
⑭ Restrictors	see page 50/51
Sleeve 8/8 mm (no ill.)	107171*

*Same use for all colour variations possible.

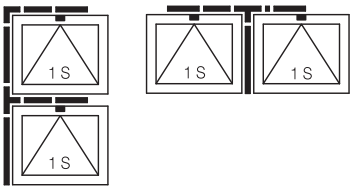

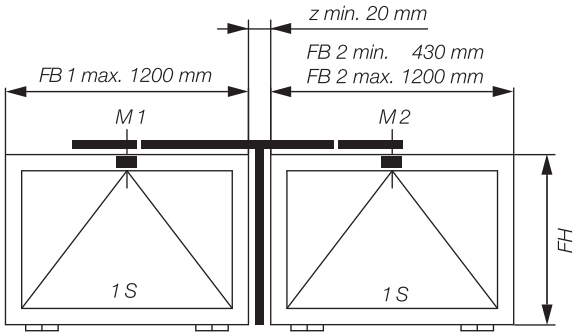

PRIMAT-FL 190, type: hm, 2 sashes, side-by-side

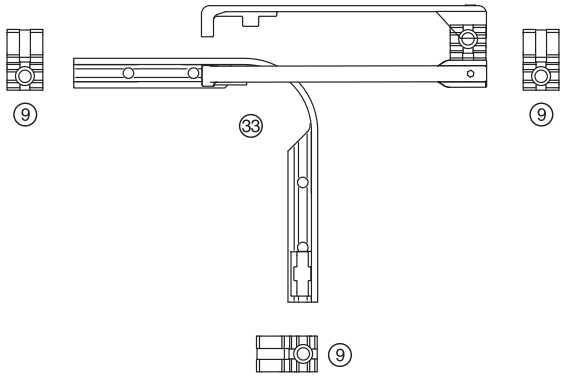

PRIMAT-FL 190, type: f, 2 sashes, on top of each other, *sash heights of 400 mm or greater, 21 mm possible.

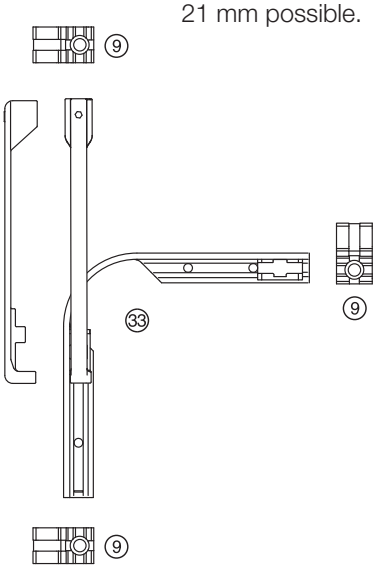

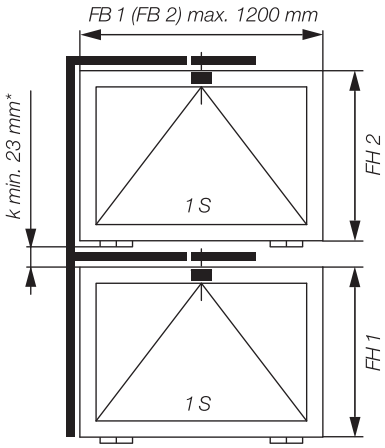

*FH 1 ≥ 440 mm ≙ k ≥ 21 mm

Side and front view
Lever position on the left (right laterally reversed)

Fitting parts

33 Corner for double-sash windows

9 Rod guide

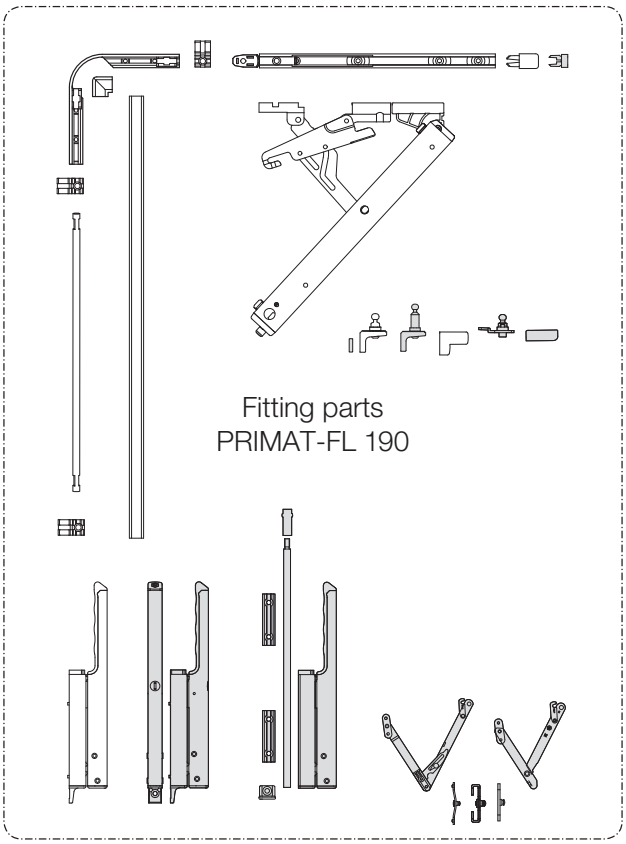

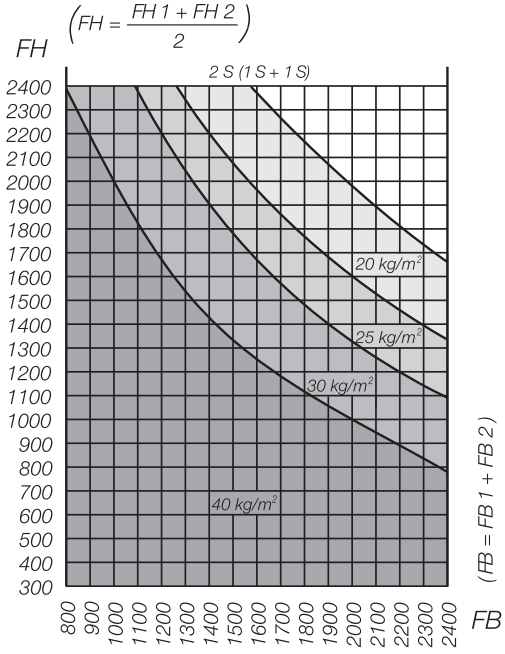

Note:
For double-sash windows in application diagrams, the sash weight and width always refer to the total weight or width of both sashes.

Corner for double-sash windows, PRIMAT-FL 190

Packing units

Bag with corner for double sash windows ⑨㉝	228118*

*Same use for all colour variations possible.

requires the following additional fitting parts:
1. 2 x additional carton PRIMAT-FL 190
2. Alu lever
3. Rod 8 mm Ø
4. Alu cover profile

Only for type: f
5. Bag with corner
6. Additional rod

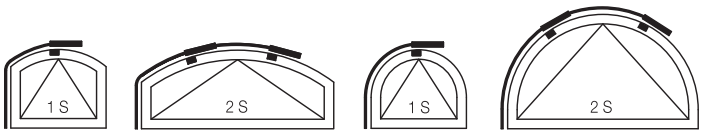

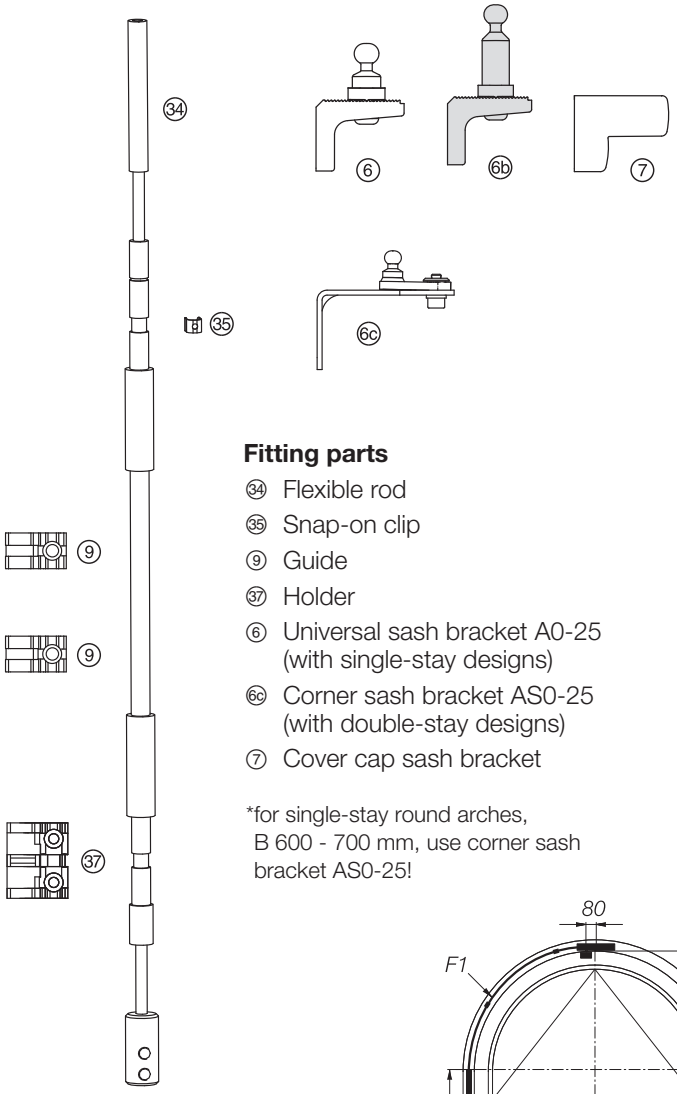

Fitting parts

- 34 Flexible rod
- 35 Snap-on clip
- 9 Guide
- 37 Holder
- 6 Universal sash bracket A0-25 (with single-stay designs)
- 6c Corner sash bracket AS0-25 (with double-stay designs)
- 7 Cover cap sash bracket

*for single-stay round arches, B 600 - 700 mm, use corner sash bracket AS0-25!

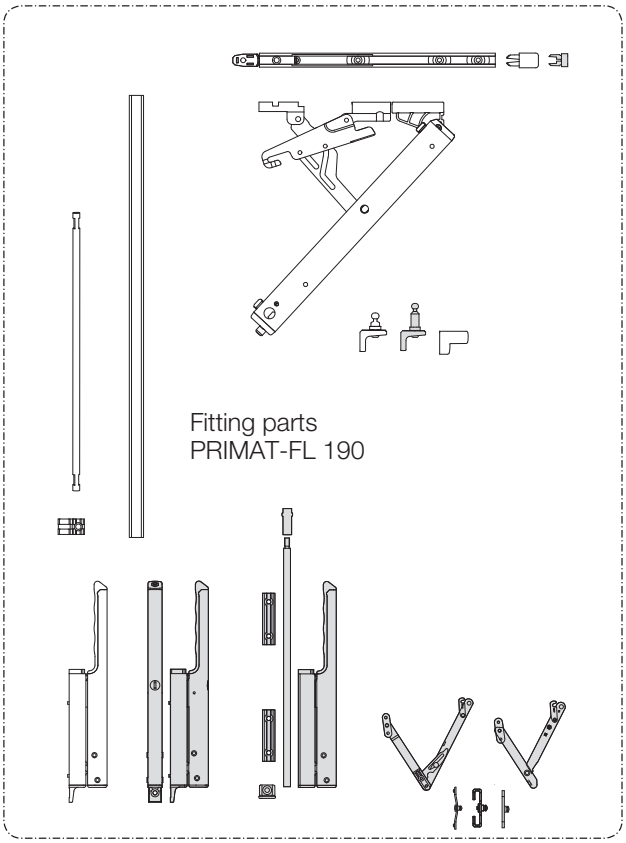

Optional:

- 6b Sash bracket A0-25 timber window

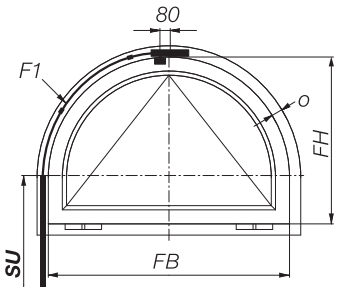

Round arch, single stay

FB	F1	SU (min.)
600 ... 850 mm	700 mm	450 mm
851 ... 1200 mm	1000 mm	550 mm
1201 ... 1300 mm	1250 mm	500 mm

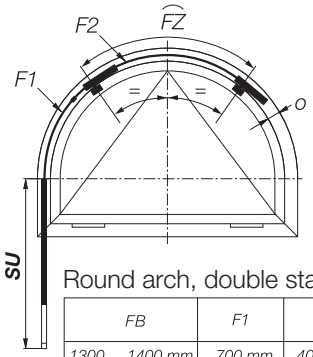

Round arch, double stay

FB	F1	F2	FZ	SU (min.)
1300 ... 1400 mm	700 mm	400 mm	740 mm	400 ... 350 mm
1401 ... 1600 mm	1000 mm	400 mm	740 mm	650 ... 550 mm
1601 ... 2000 mm	1000 mm	700 mm	1040 mm	700 ... 500 mm

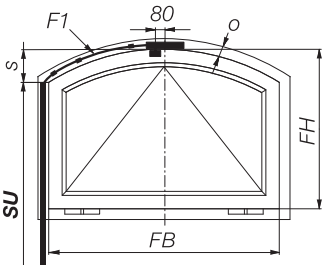

Flat arch, single stay

FB	F1	SU (min.)
600 ... 700 mm	700 mm	500 mm
701 ... 800 mm		450 mm
801 ... 1100 mm		300 mm
1101 ... 1200 mm	1000 mm	600 mm
1201 ... 1300 mm		550 mm

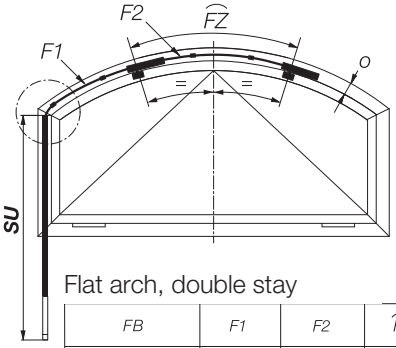

Flat arch, double stay

FB	F1	F2	FZ	SU (min.)
1300 ... 1500 mm	700 mm	400 mm	740 mm	730 ... 630 mm
1501 ... 1800 mm	700 mm	700 mm	1040 mm	780 ... 630 mm
1801 ... 2100 mm	700 mm	1000 mm	1340 mm	780 ... 630 mm
2101 ... 2400 mm	700 mm	1250 mm	1590 mm	750 ... 600 mm

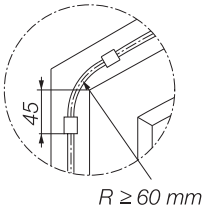

Flexible rods for flat and round arches

Packing units		grey	white	black
Bag with flexible rod,	L = 400 mm	175344	175347	175350
complete with accessories	L = 700 mm	175353	175356	175359
for round and flat arches ㉞ ㉟ ⑨ ㊲	L = 1000 mm	175362	175365	175368
	L = 1250 mm	175371	175374	175377
	L = 1700 mm	133925	133919	133925
	L = 2000 mm	133934	133928	133931

Individual parts		grey	white	black
㉞ Flexible rod	L = 400 mm	123623	123617	123620
	L = 700 mm	123515	123506	123512
	L = 1000 mm	123527	123518	123524
	L = 1250 mm	123539	123530	123536
	L = 1700 mm	123701	123695	123698
	L = 2000 mm	123641	123632	123635
㉟ Snap-on clip		107411	107411	107411
⑨ Guide		127658	127652	127655
㊲ Holder		127712	127706	127709
⑥c Corner sash bracket AS0-25		172334	172337	172340
⑥ Universal sash bracket A0-25		172083	172083	172083
⑦ Cover cap for universal sash bracket A0-25		195878	195872	195875

Use design black for designs medium bronze and Niro look.

Requires the following additional fitting parts:
1. Additional carton PRIMAT-FL 190
2. Alu lever
3. Rod 8 mm Ø
4. Alu cover profile

Note:
The double stay design (for sash widths of 1300 or greater) requires
2 additional cartons for bevel windows as well as 2 flexible rods.

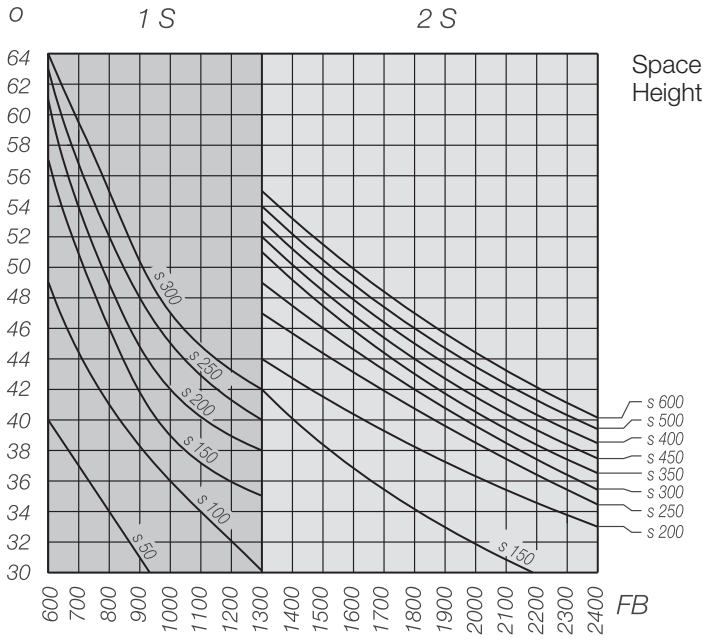

Space requirements on the frame, measure o
Height of the arch rise, measure s

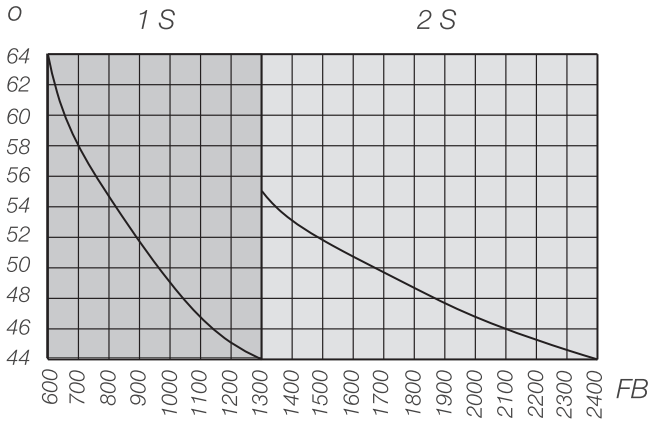

Flat arch window

Round arch window

Note:
For flush surface windows,
please contact our technicians.

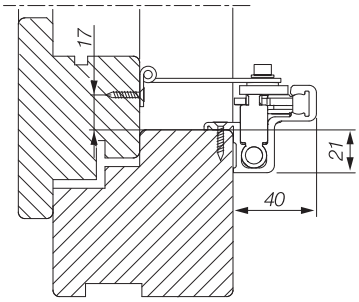

Vertical section on the timber window with stay holder 1

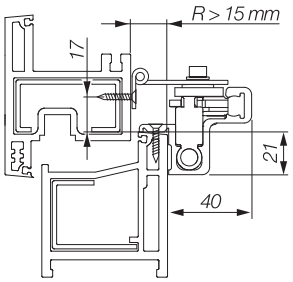

Vertical section on the PVC window with stay holder 1

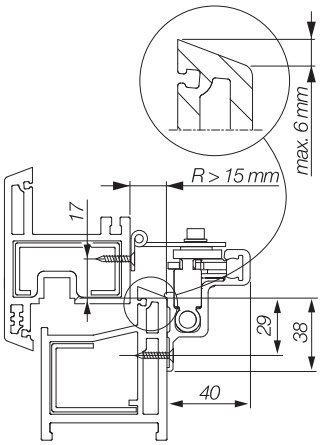

Vertical section on the PVC window with stay holder 2

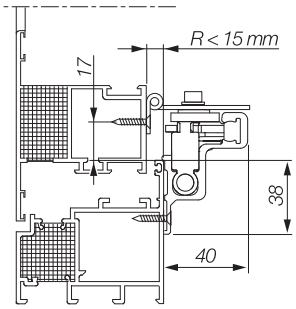

Vertical section on the Alu window with stay holder 2

Range of application PRIMAT-A

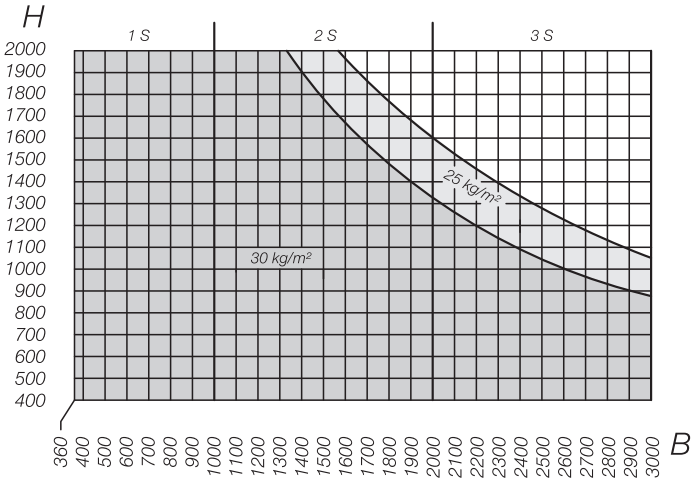

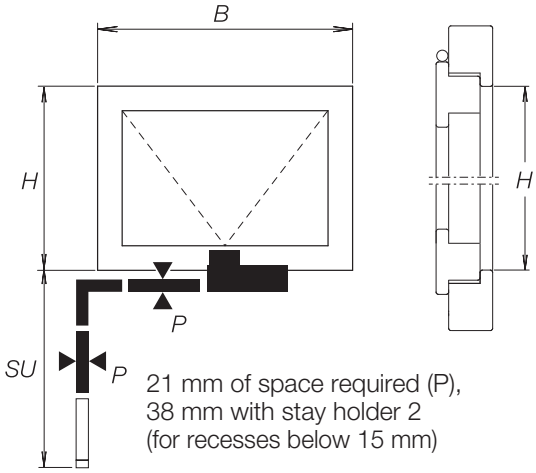

21 mm of space required (P),
38 mm with stay holder 2
(for recesses below 15 mm)

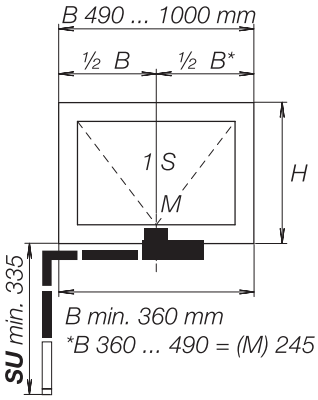

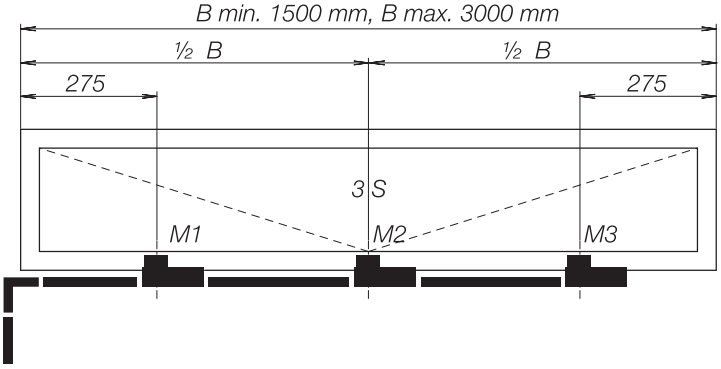

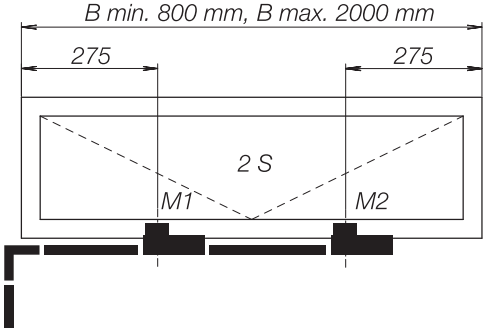

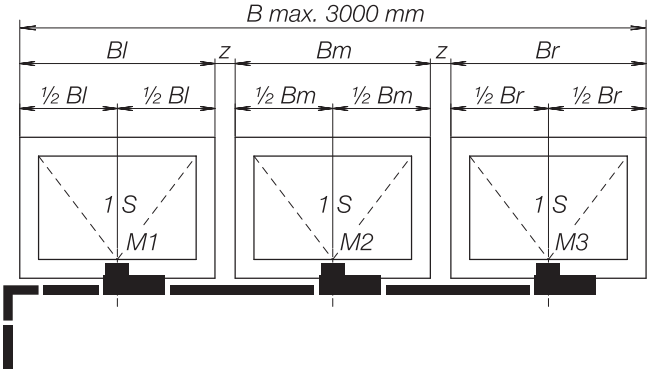

Range of application PRIMAT-A

Sash width
at least360 mm - max. 1000 mm 1 stay
at least800 mm - max. 2000 mm 2 stays
at least1500 mm - max. 3000 mm 3 stays

Glass weights* of up to 30 kg/m²
*weight for thickness of 1 mm ~ 2.5 kg/m²
Does not apply unless the distance between the sash's gravity centre and the centre of rotation s ≤ 60 mm.

Sash heights	of 400 mm or greater
Space requirements	21 mm (38 mm with stay holder 2)
Lever travel	58 mm
Sash weight	max. 80 kg
Opening width	approx. 170 mm (adjustable)

Colour information PRIMAT-A

	Stay	Colour profile	Lever	PVC cover
Design EV1	EV 1 ecru, anodized	EV 1 ecru, anodized	EV 1 ecru, anodized	black
Design white	white, coated RAL 9016	white, coated RAL 9016	white, coated RAL 9016	white
Design brown	brown coated RAL 8077	brown coated RAL 8077	brown coated RAL 8077	black
Design black	black, coated RAL 9005	black, coated RAL 9005	black, coated RAL 9005	black

Note: Cover caps colour matched, special colours available on request. Functional parts steel galvanized.
Rods made of hand selected steel materials, polished galvanized.

Text for tender
Flat type opener PRIMAT-A for outward tilt sashes, visible aluminium parts in EV 1, white or black.
Opening width approx. 170 mm. Stainless steel stay and sash bracket, rods made of steel with surface finish **HAUTAU-S**plus (chromed silver), sash bracket on the pivot arm screwed on self-securingly, locking pressure continuously adjustable.
Rod suspendable and completely concealed, cover profile without bevel cut with corner cover cap. Rugged Alu lever with ergonomic recessed grips.

Order details for made-to-measure design
1. Measure SU = rod length (minimum measure 335 mm)
2. Measure B = sash width (360 - 3000 mm)
3. Measure H = sash height (minimum measure 400 mm)
4. Number of stays
5. Stay holder design = stay holder 1 (recesses of 15 mm or greater, 21 mm of space required)
   stay holder 2 (recesses below 15 mm, 38 mm of space required)
6. Sash bracket design = R0-25, R26-50, R51-75, R76-100 for recesses of 0 - 25, 26 - 50, 51 - 75 and 76 - 100 mm
7. Lever position = left or right (only necessary for special designs)
8. Measure d = inner edge of the frame to middle of the rod (only necessary for measures other than 12 mm)
9. Measures Bl, Bm, Br, and z = 2 or 3 sashes
10. Profile system = timber, PVC, steel or aluminium windows
11. Colour = EV 1, white (RAL 9016) or black (RAL 9005)

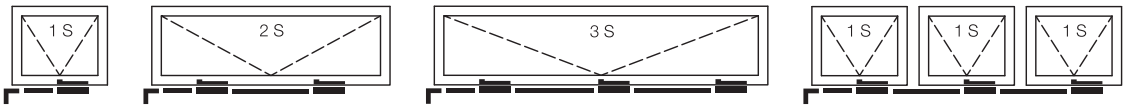

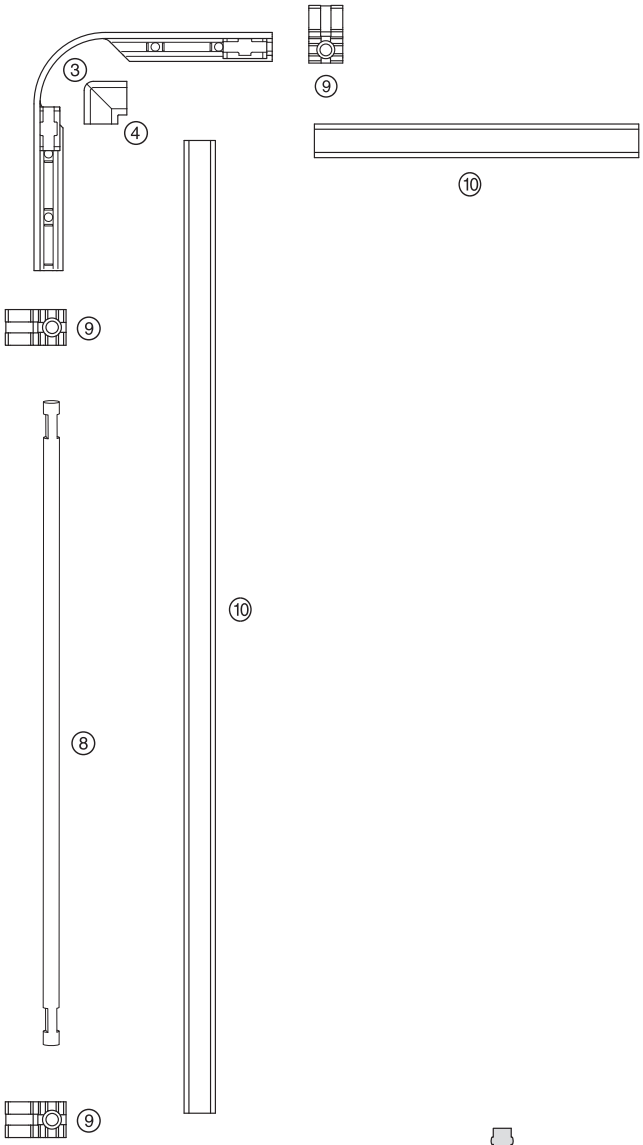

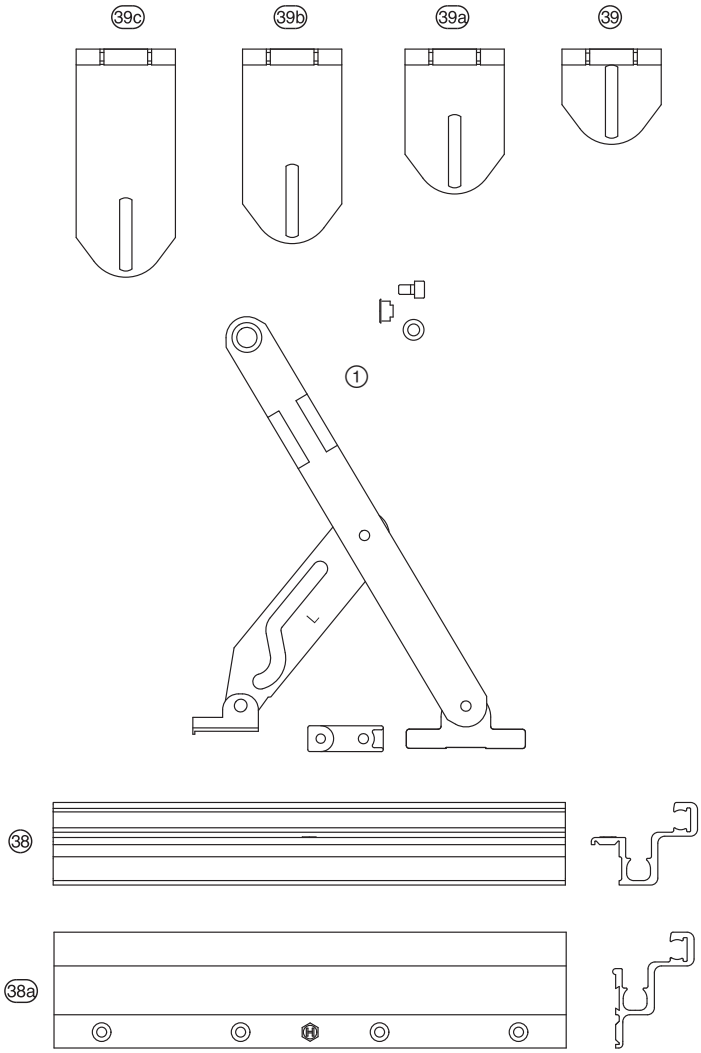

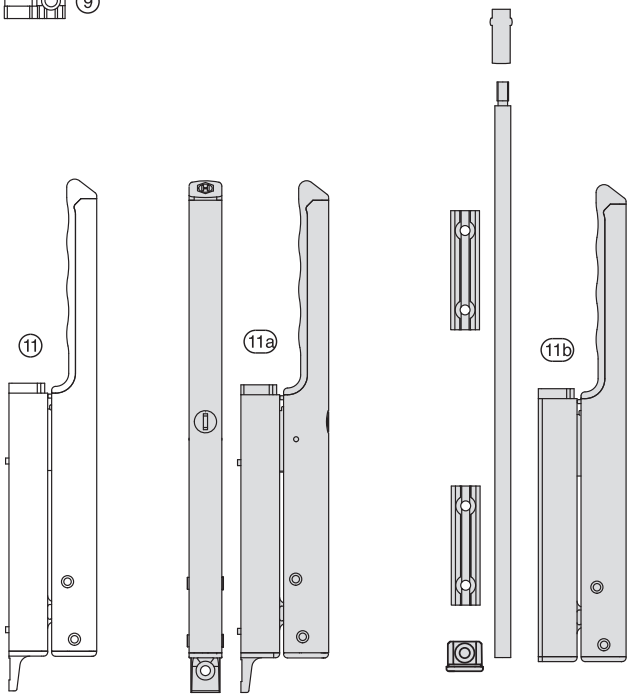

Fitting parts

① Stay
③ Chain guide, design E (suspendable)
⑧ Rod
⑨ Rod guide
⑩ Alu cover profile
⑪ Lever
㊳ Stay holder 1
㊳a Stay holder 2
㊴ Sash bracket R0-25
㊴a Sash bracket R26-50
㊴b Sash bracket R51-75
㊴c Sash bracket R76-100

Optional:

⑪a Lever, lockable
⑪b Lever, pivoting

Fitting Parts PRIMAT-A

Packing units		EV 1	white	brown	black
Additional carton PRIMAT-A with stay holder 1 and sash bracket R0-25 ① ⑨ ㊳ ㊴		139436	139439	139442	145947
Additional carton PRIMAT-A with stay holder 1 and sash bracket R26-50 ① ⑨ ㊳ ㊴a		139454	139460	139466	145950
Additional carton PRIMAT-A with stay holder 1 and sash bracket R51-75 ① ⑨ ㊳ ㊴b		139457	139463	139469	145953
Additional carton PRIMAT-A with stay holder 2 and sash bracket R0-25 ① ⑨ ㊳a ㊴		139445	139448	139451	145959
Carton with lever, stroke 58 mm ⑪		171035	171038	190219	171044
Carton with lever, lockable, stroke 58 mm ⑪a		171050	171053	228565	171059
Carton with lever, pivoting, stroke 58 mm ⑪b		168950	168956	228568	169667
Bag with corner PRIMAT-FL190 with accessories ③ ④ ⑨		228109	228106	228109	228109

Bulk pack		EV1	white	brown	black
Lever, stroke 58 mm, pack of 25 ③ ④ ⑨ ⑪		169037	169040	190222	173146
Cover profiles, pack of 20	L = 6000 mm	172316	172322	190228	172328

Individual parts		EV1	white	brown	black
① + ㊳ Stay with stay holder 1 and control arm		108242	108245	108248	145965
① + ㊳a Stay with stay holder 2 and control arm		108251	108254	108257	145971
③ Flexible corner PRIMAT-FL190 complete		196538	196538	196538	196538
④ Cover cap PMAT/SPGE 201E		211546	211549	211546	211546
㊴ Sash bracket R0-25		108194	108194	108194	108194
㊴a Sash bracket R26-50		108197	108197	108197	108197
㊴b Sash bracket R51-75		108200	108200	108200	108200
㊴c Sash bracket R76-100		145392	145392	145392	145392
⑧ Rod 8 mm Ø, design E	L = 1000 mm	108041	108041	108041	108041
	L = 2000 mm	108044	108044	108044	108044
	L = 2500 mm	108047	108047	108047	108047
	L = 3000 mm	108050	108050	108050	108050
	L = 3750 mm	108053	108053	108053	108053
⑨ Rod guide		176337	176337	176337	176337
⓪ Alu cover profile	L = 2000 mm	168869	168872	168875	168881
	L = 3000 mm	168839	168842	168845	168851

Installation instructions PRIMAT-A	184656

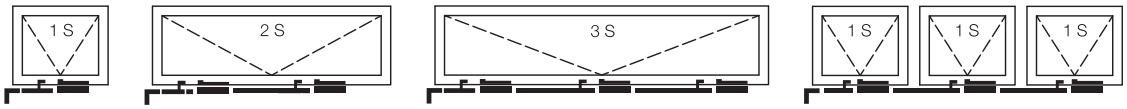

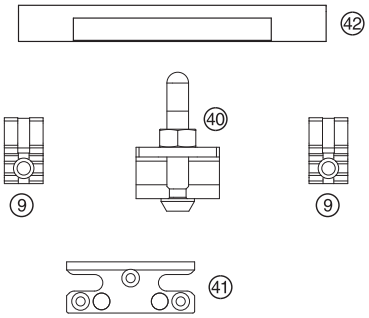

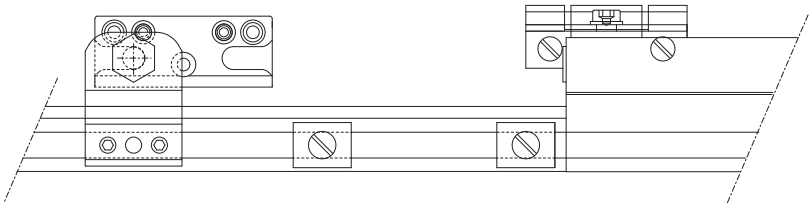

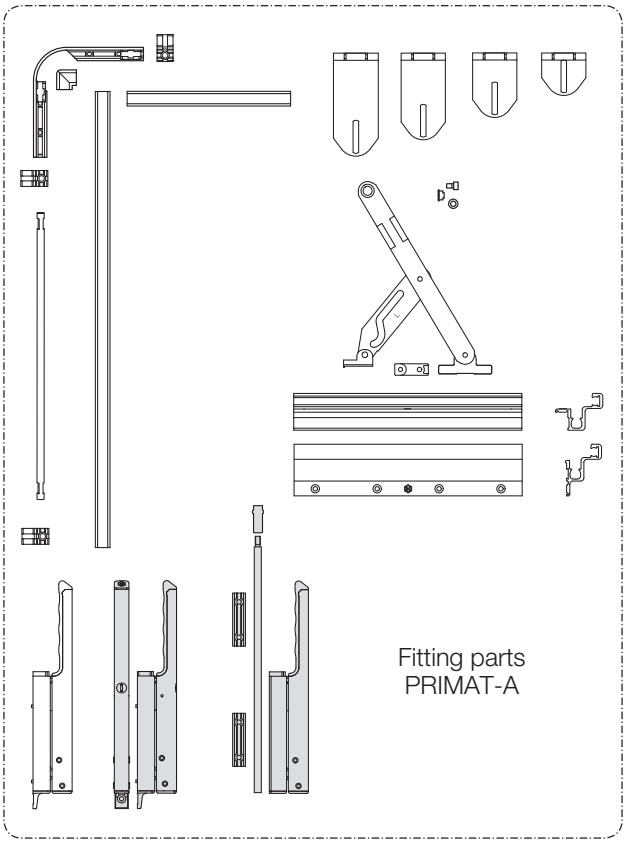

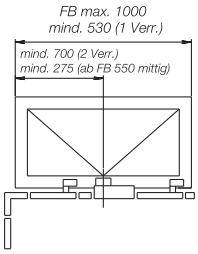

Verr. = locking

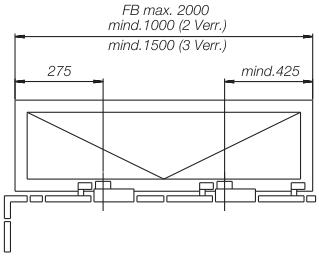

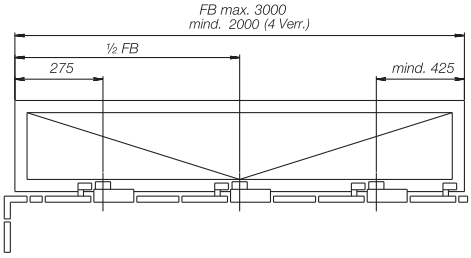

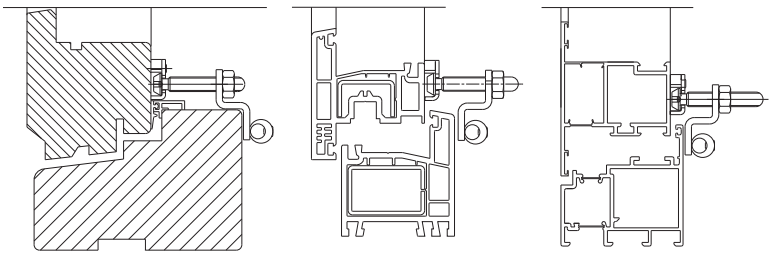

Vertical sections on timber, PVC, and metal windows

Range of application

Sash width FB

530 - 700 mm	1 stay	+ 1 locking
701 - 1000 mm	1 stay	+ 2 lockings
1001 - 1500 mm	2 stays	+ 2 lockings
1501 - 2000 mm	2 stays	+ 3 lockings
2001 - 3000 mm	3 stays	+ 4 lockings

Additional locking ZV/A

		EV 1	white	brown	black
Accessories ZV/A	recess 0 - 25 mm	151819	151831		178763
HAUTAU-S^{plus}	recess 26 - 50 mm	151822	151834		178766
	recess 51 - 75 mm	151825	151837		178769

Individual parts		EV 1	white	brown	black
㊵ Locking	0 - 25	151810	151810		151810
	26 - 50	151813	151813		151813
	51 - 75	151816	151816		151816
㊶ Security striker		151759	151759		151759
⑨ Rod guide		176337	176337		176337
㊷ Alu cover profile ZV/A		152095	152098		178760

Fitting composition
for 1 outward opening sash, horizontal and straight
1-4 accessories ZV/A (number depends on width)

requires the following additional fitting parts:
1. Additional carton
2. Alu lever, lockable
3. Rod 8 mm Ø
4. Alu cover profile

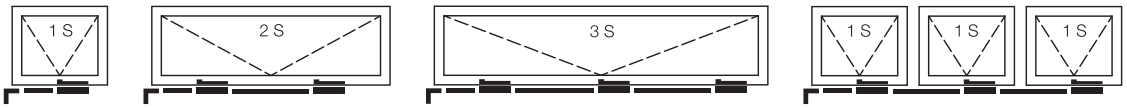

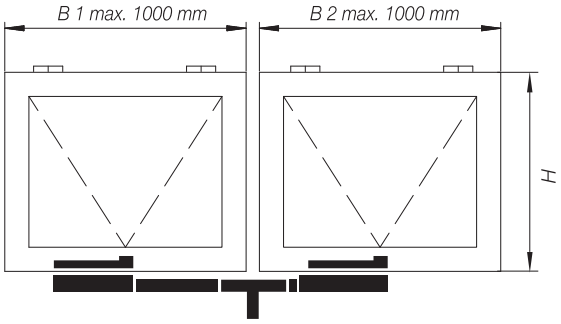

PRIMAT-A, type: hm, 2 sashes, side-by-side

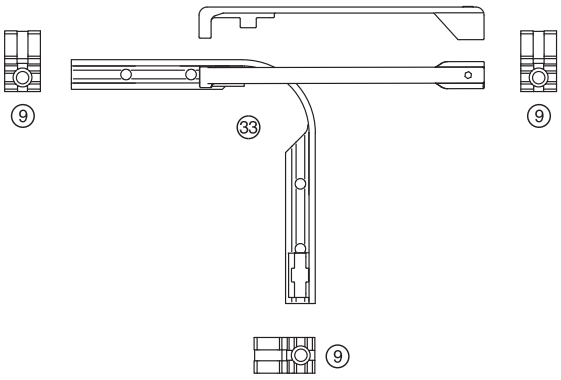

Side and front view
Lever position on the left (right laterally reversed)

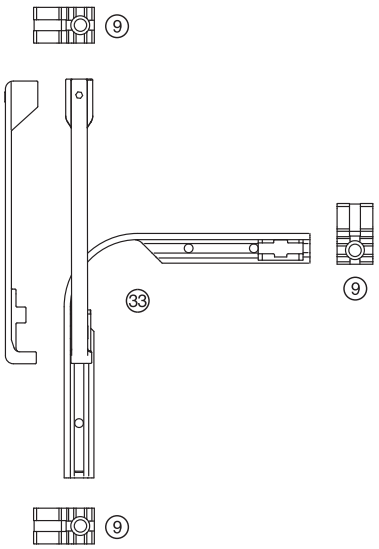

Fitting parts

33 Corner for double-sash windows

9 Rod guide

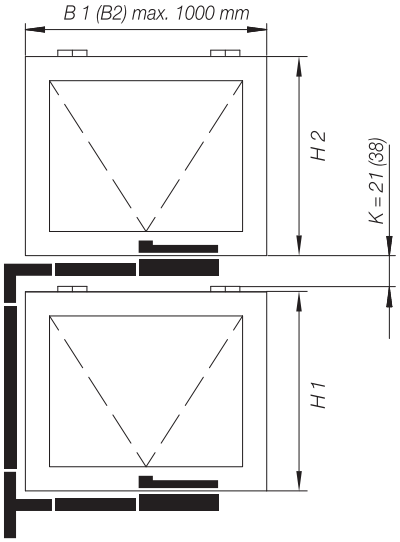

PRIMAT-A, type: f,
2 sashes, on top of each other

Space requirements between the sashes measured from the bottom edge of the upper sash to the hinges of the lower sash (measure K):

21 mm with stay holder 1
38 mm with stay holder 2

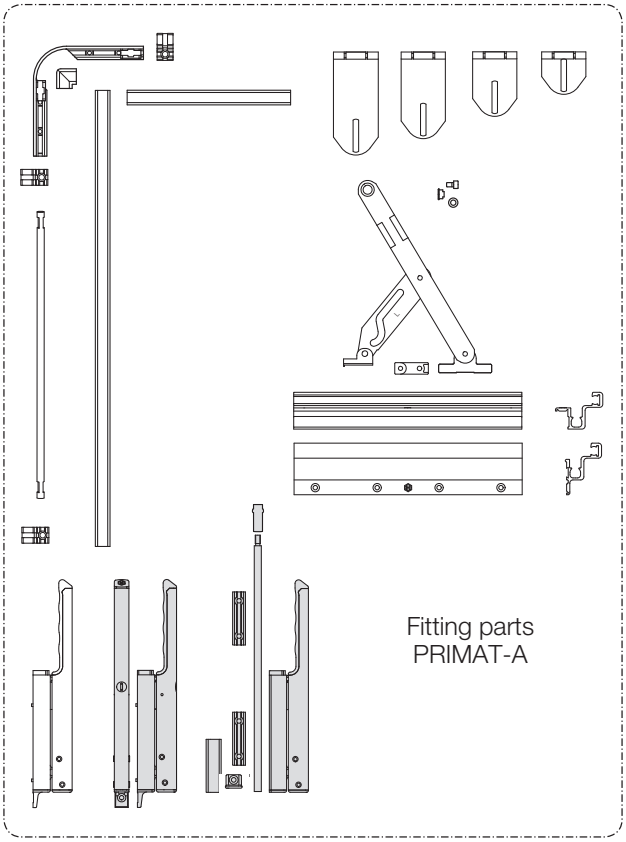

Fitting parts
PRIMAT-A

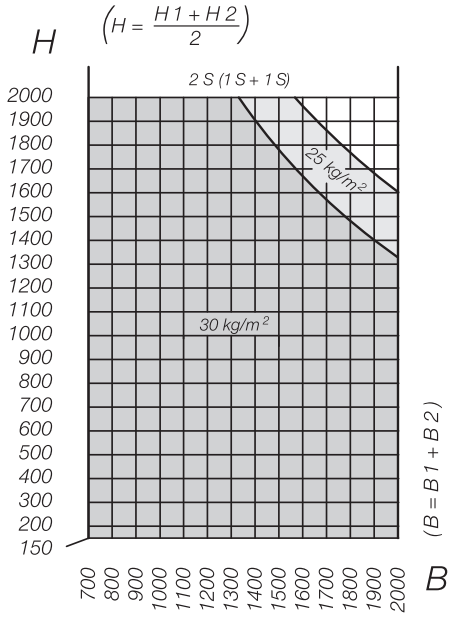

Corner for double-sash windows, PRIMAT-A

Packing units

Bag with corner PRIMAT-FL 190 for double sash windows ⑨ ㉝	228118*

*same use for all colour variations possible

requires the following additional fitting parts:
1. 2 x additional carton PRIMAT-A
2. Alu lever
3. Rod 8 mm Ø
4. Alu cover profile

Only for type: f
5. Bag with corner, design E = suspendable
6. Additional rod

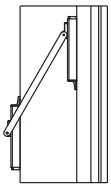

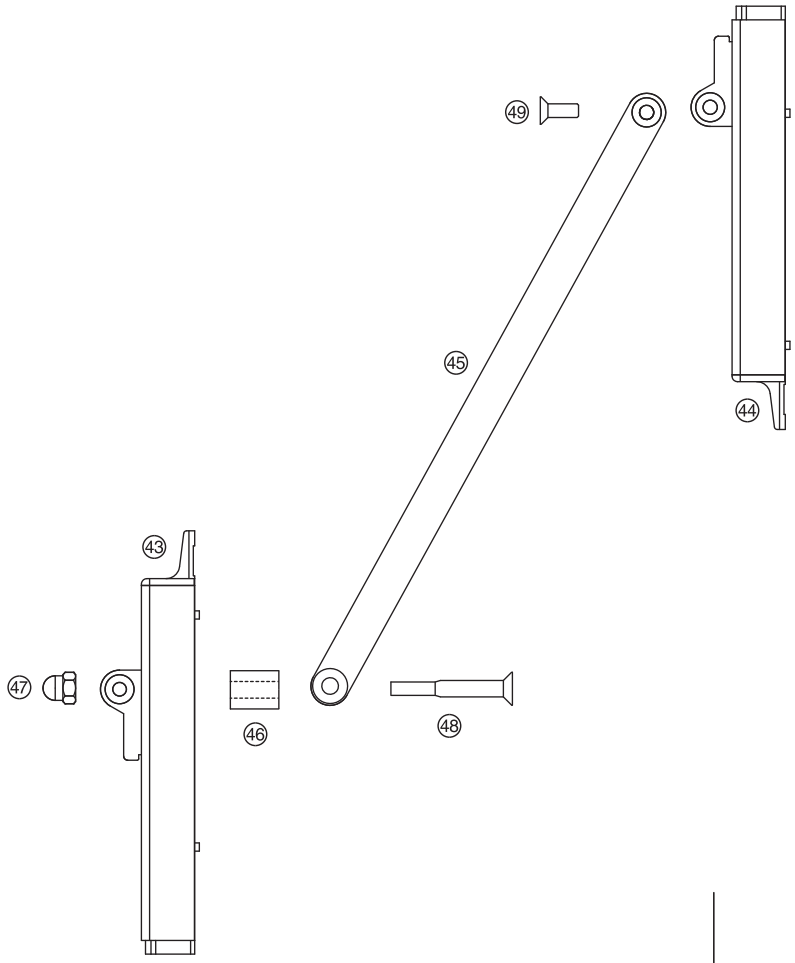

Fitting parts

43 Slide bar 1
44 Slide bar 2
45 Drive rod
46 Spacer sleeve
47 Cap nut
48 Screw M6 x 45
49 Screw M5 x 14

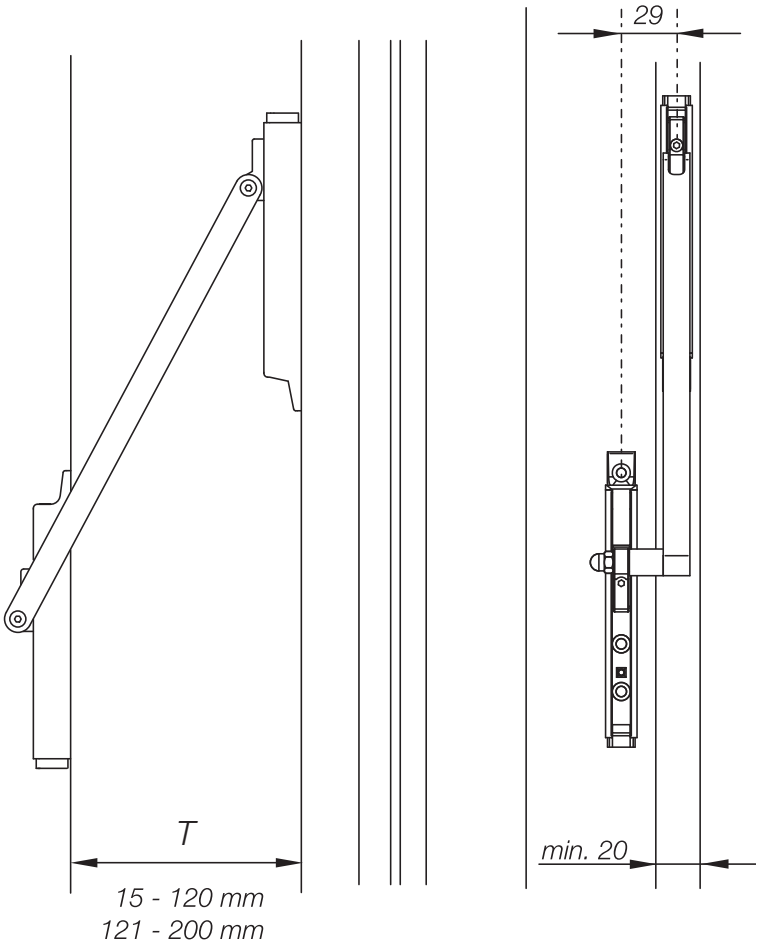

Transmission for curtain walling

Packing units		EV 1	white	black
Transmission for curtain walling ㊸ ㊹ ㊺ ㊻ ㊼ ㊽ ㊾	size 1 (T = 15 - 120 mm)	171828	171831	171834
	size 2 (T = 121 - 200 mm)	171837	171840	171843

Individual parts		EV 1	white	black
㊸ Slide bar 1		171876	171879	171882
㊹ Slide bar 2		171885	171888	171891
㊺ Drive rod	(T = 15 - 120 mm)	171795	171798	171801
	(T = 121 - 200 mm)	171807	171810	171813
㊻ Spacer sleeve		171846	171846	171846
㊼ Cap nut		171825	171825	171825
㊽ Screw M6 x 45		171822	171822	171822
㊾ Screw M5 x 14		175053	175053	175053

Use design black for designs medium bronze and Niro look.

PRIMAT-FL 190
requires the following additional fitting parts:
1. Basic carton PRIMAT-FL 190
2. Rod 8 mm Ø
3. Alu cover profile

PRIMAT-A
requires the following additional fitting parts:
1. Additional carton PRIMAT-A
2. Bag with corner, design E = suspendable
3. Alu lever
4. Rod 8 mm Ø
5. Alu cover profile

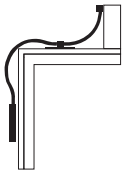

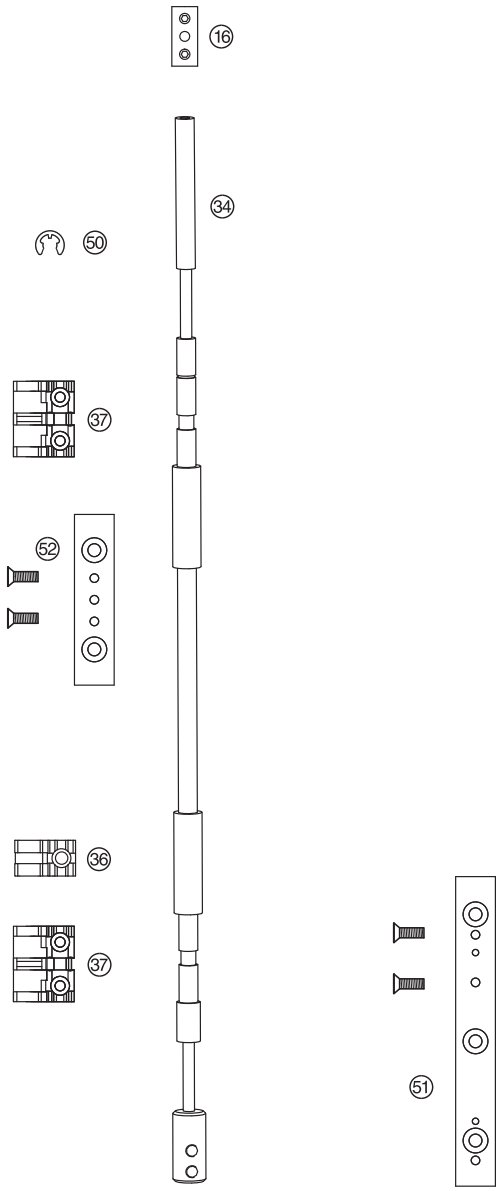

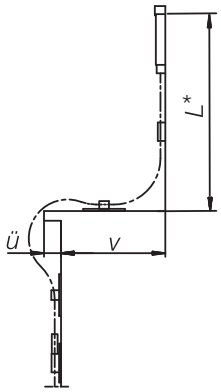

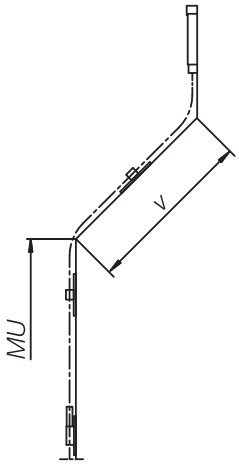

Range of application
For single and double stay systems
Minimum sash height = 300 mm
* acc. application range PRIMAT-FL 190

measure v up to 400 mm ≙ Rods 700 mm
measure v up to 700 mm ≙ Rods 1000 mm
measure v up to 950 mm ≙ Rods 1250 mm
measure v up to 1300 mm ≙ Rods 1700 mm
measure v up to 1700 mm ≙ Rods 2000 mm

Glass weights of up to 30 kg/m²
(Weight for thickness of 1 mm ~ 2.5 kg/m²)
Does not apply unless the distance between the sash's gravity centre and the centre of rotation is ≤ 60 mm.

Fitting parts

- ⑯ Sleeve 8/8
- ㉞ Flexible rod
- ㊱ Guide
- ㊲ Holder
- ㊿ Lock washer
- 51 Plugging plate, lever
- 52 Plugging plate, clamping guide

Measure v = depth of the reveal (window sill depth), above 200 mm with guide, up to 200 mm without guide

Measure MU = upper edge of the window will to lower edge of the lever at least 455 mm

Measure ü = sill depth max. 40 mm

Measure L* = upper edge of the sash to upper edge of the window will at least 405 mm

Flexible transmission

Packing units		EV 1	white	black
Bag of accessories for flexible transmission (supplementing flexible rod) ⑯ ㊿ ㊲ ㊺ ㊷		108308	108302	108305
Bag of accessories for flexible transmission without plugging plate (supplementing flexible rod) ⑯ ㊿ ㊲		190864	190867	190870
Bag with flexible rod,	L = 400 mm	175344	175347	175350
complete with accessories	L = 700 mm	175353	175356	175359
㉞ ㊲ ㊱	L = 1000 mm	175362	175365	175368
	L = 1250 mm	175371	175374	175377
	L = 1700 mm	133925	133919	133922
	L = 2000 mm	133934	133928	133931

Individual parts		EV 1	white	black
㉞ Flexible rod	L = 400 mm	123623	123617	123620
	L = 700 mm	123515	123506	123512
	L = 1000 mm	123527	123518	123524
	L = 1250 mm	123539	123530	123536
	L = 1700 mm	123701	123695	123698
	L = 2000 mm	123641	123 632	123655
⑯ Sleeve 8/8 mm		107171	107171	107171
㊿ Lock washer		155750	155750	155750
㊲ Holder		127712	127706	127709
㊺ Plugging plate, lever (without screws)		107399	107399	107399
㊷ Plugging plate, clamping guide (without screws)		107402	107402	107402
㊱ Guide		127658	127652	127655

Use design black for designs medium bronze and Niro look.

PRIMAT-FL 190
requires the following additional fitting parts:
1. Additional carton PRIMAT-FL 190
2. Alu lever
3. Corner
4. Rod 8 mm Ø
5. Alu cover profile

PRIMAT-A
requires the following additional fitting parts:
1. Additional carton PRIMAT-A
2. Alu lever
3. Corners (only necessary in certain assembly situations)
4. Rod 8 mm Ø
5. Alu cover profile
6. Bag with flexible rod
7. Bag of accessories for flexible transmission

HAUTAU

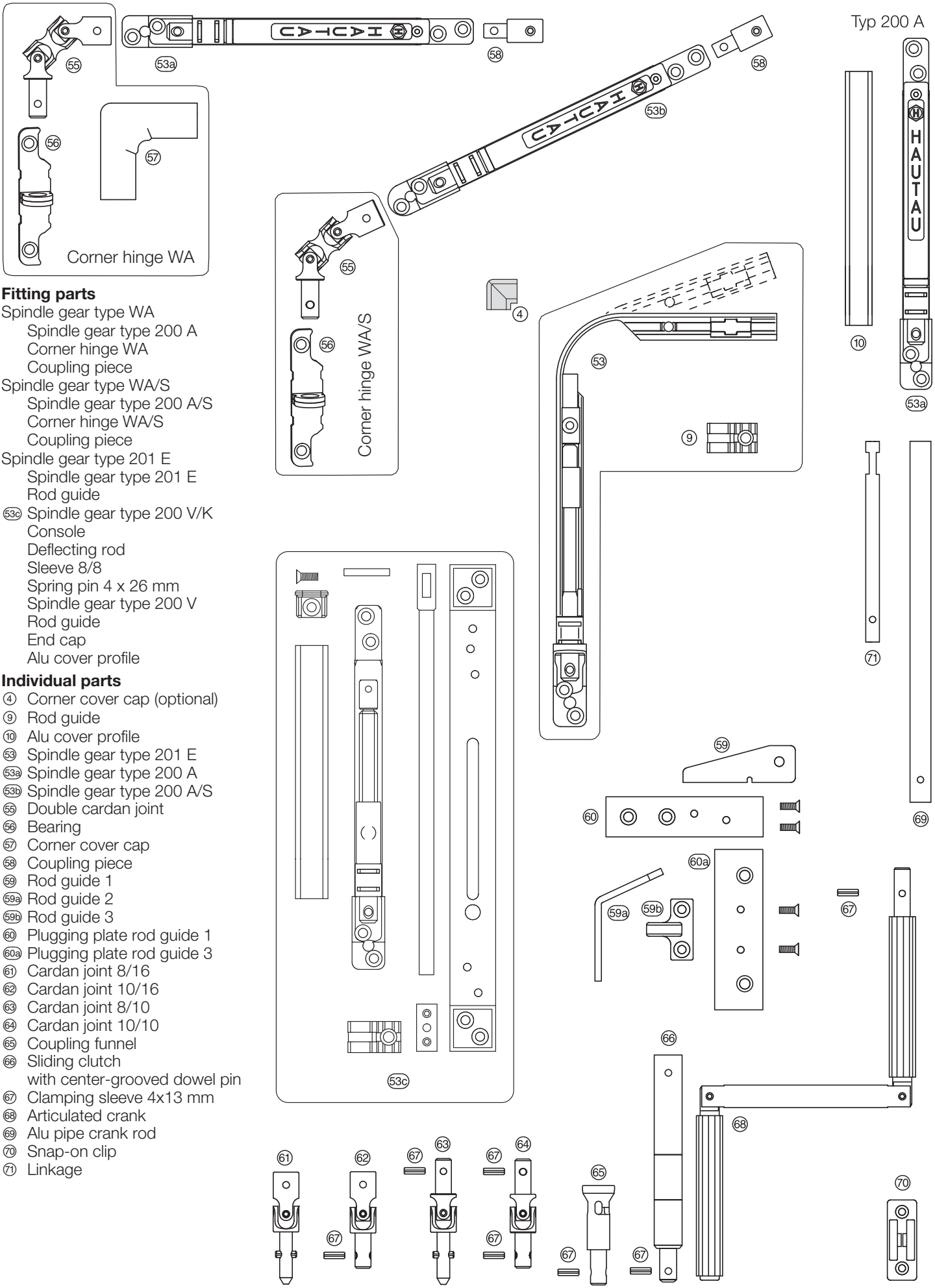

Fitting parts

Spindle gear type WA
- Spindle gear type 200 A
- Corner hinge WA
- Coupling piece

Spindle gear type WA/S
- Spindle gear type 200 A/S
- Corner hinge WA/S
- Coupling piece

Spindle gear type 201 E
- Spindle gear type 201 E
- Rod guide
- 53c Spindle gear type 200 V/K
- Console
- Deflecting rod
- Sleeve 8/8
- Spring pin 4 x 26 mm
- Spindle gear type 200 V
- Rod guide
- End cap
- Alu cover profile

Individual parts

4 Corner cover cap (optional)
9 Rod guide
10 Alu cover profile
53 Spindle gear type 201 E
53a Spindle gear type 200 A
53b Spindle gear type 200 A/S
55 Double cardan joint
56 Bearing
57 Corner cover cap
58 Coupling piece
59 Rod guide 1
59a Rod guide 2
59b Rod guide 3
60 Plugging plate rod guide 1
60a Plugging plate rod guide 3
61 Cardan joint 8/16
62 Cardan joint 10/16
63 Cardan joint 8/10
64 Cardan joint 10/10
65 Coupling funnel
66 Sliding clutch with center-grooved dowel pin
67 Clamping sleeve 4x13 mm
68 Articulated crank
69 Alu pipe crank rod
70 Snap-on clip
71 Linkage

Fitting parts spindle gear

Packing units	EV 1	white	black
	see the following page		

Individual parts and assembly groups		EV 1	white	black
Spindle gear 201 E ⑨ ⑤③ ④	left	228511	228505	228511
	right	228508	228502	228508
⑤③a Spindle gear 200 A		172065	172065	172065
⑤③b Spindle gear 200 A/S		173461	173461	173461
⑤③c Spindle gear 200 V/K (on console for PRIMAT-A, type H)		139577	139580	176028
⑩ Alu cover profile for spindle gear 200 A		173443	173446	173449
Corner hinge WA, complete ⑤⑤ ⑤⑥ ⑤⑦		134066	134060	134063
Corner hinge WA/S, complete ⑤⑤ ⑤⑥		134072	134072	134069
⑦① Linkage PRIMAT-FL 190		108656	108656	108656
⑤⑧ Coupling piece PRIMAT-FL 190 for corner hinge WA		108731	108731	108731
⑥① Cardan joint 8/16 including pin		108341	108341	108344
⑥② Cardan joint 10/16 (without clamping sleeve)		108335	108335	108338
⑥③ Cardan joint 8/10 (without clamping sleeve)		108347	108347	108350
⑥④ Cardan joint 10/10 (without clamping sleeve)		123437	123437	123440
⑥⑤ Coupling funnel (without clamping sleeve)		108359	108359	125078
⑥⑥ Sliding clutch (to prevent an overload)		108728	108728	108728
⑤⑥ Bearing for WA, WA/S		108743	108743	139589
⑤⑤ Double cardan joint for WA, WA/S		108353	108353	108356
⑤⑦ Corner cover cap for WA		127886	127880	127883
⑤⑨ Rod guide 1		108329	108332	133976
⑥⓪ Plugging plate for rod guide 1 with screws		133958	133961	173389
⑤⑨a Rod guide 2		133979	142586	142583
⑤⑨b Rod guide 3		133211	133214	133217
⑥⓪a Plugging plate for rod guide 3 with screws		133967	133970	133973
⑥⑨ Alu pipe for crank rod	Stock length approx. 6000 mm	108455	-	-
	Length 1000 mm	108410	108413	173323
	Length 1500 mm	108419	108422	173326
	Length 2000 mm	108428	108431	173329
	Length 2500 mm	108437	108440	173332
	Length 3000 mm	108446	108449	173335
⑥⑧ Articulated crank		125372	125375	173341
⑦⓪ Snap-on clip		126533	126527	173338
⑥⑦ Clamping sleeve 4x13 mm		130391	130391	130391
④ Corner cover cap for spindle gear 201 E		211546	211549	211546
⑨ Rod guide		176337	176337	176337

Contents of the packing units spindle gear

Packing units	Packing content
Accessories, design SF With spindle gear 201 E	1 spindle gear 201 E, 1 snap-on clip, 1 articulated crank, 2 clamping sleeves 4 x 13 mm, and 1 cardan joint 10/16
Accessories, design SA with spindle gear 201 E	1 spindle gear 201 E and 1 cardan joint 8/16 with pin
Accessories, design SG with spindle gear 201 E	1 spindle gear 201 E, 1 snap-on clip, 1 articulated crank, 4 clamping sleeves 4x13 mm, 1 cardan joint 10/10, 1 cardan joint 10/16 1 rod guide, 1 plugging plate with screws
Accessories, design SF with spindle gear 200 A	1 cardan joint 10/16, 1 rod guide 1, and 1 plugging plate with screws 1 spindle gear 200 A (without cover profile), 1 linkage PRIMAT-FL 190, 1 snap-on clip, 1 articulated crank, 2 clamping sleeves 4x13 mm, 1 cardan joint 10/16
Accessories, design SA with spindle gear 200 A	1 spindle gear 200 A (without cover profile), 1 linkage PRIMAT-FL 190, 1 cardan joint 8/16 with pin
Accessories, design SG with spindle gear 200 A	1 spindle gear 200 A (without cover profile), 1 linkage PRIMAT-FL 190, 1 articulated crank, 4 clamping sleeves 4 x 13 mm, 1 cardan joint 10/10, 1 cardan joint 10/16, 1 rod guide 1, 1 plugging plate with screws
Accessories for design SA supplementing design SF	1 coupling funnel, 1 cardan joint 8/16 with pin
Accessories for design SG supplementing design SF	1 cardan joint 10/10, 1 rod guide 1, 2 clamping sleeves 4x13 mm

Note:

The listed packing units with spindle gears 201 E and 200 A are meant to be used in combination with PRIMAT-FL 190. The Alu cover profile is not included. However, it can be cut out of existing stock. Packing units 200 A including linkages for other fanlight openers are also available on request. The Alu cover profile will then be included in EV 1.

Use design black for designs medium bronze and Niro look.

Application examples of spindle gears:

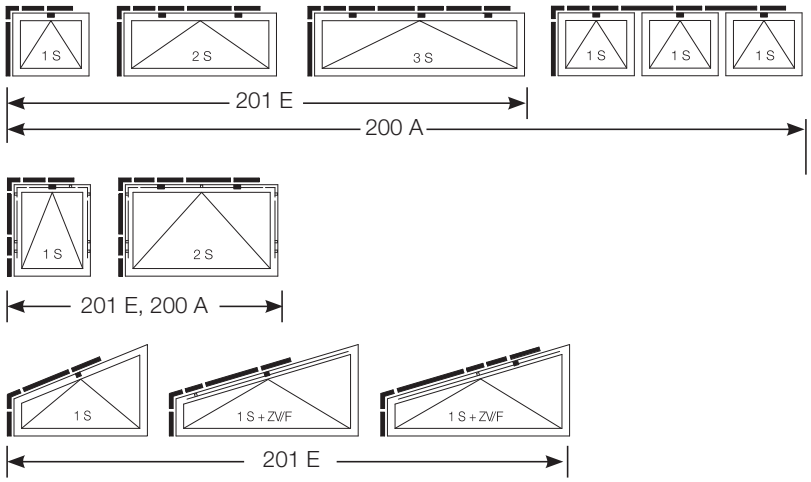

Caution!

Please note that the spindle gear 201 E does not include the chain guide of the PRIMAT-FL 190. Therefore, make sure to order the additional carton PRIMAT-FL 190. Single-stay designs can be used for sash widhts (FB) of up to 1200 mm, double-stay designs for sash widths of up to 2400, and slanted designs for sash widths of up to 2000 mm.

Please note that the spindle gear 200 A does not include the lever of the PRIMAT-FL 190. Therefore, make sure to order the additional carton PRIMAT-FL along with a chain guide. (Pages 8-11)

Fitting parts gear drive continued

Packing units		EV 1	white	black
Accessories spindle gear 201 E	right	173362	173368	173374
for PRIMAT-FL 190, design SF 53 62 67 68 70 9 4	left	173365	173371	173377
Accessories spindle gear 201 E	right	173380	173380	173392
for PRIMAT-FL 190, design SA 53 61 9 4	left	173383	173383	173395
Accessories spindle gear 201 E	right	173398	173404	173410
for PRIMAT-FL 190, design SG 53 59 60 62 64 67 68 70 9 4	left	173401	173407	173413
Accessories spindle gear 200 A for PRIMAT-FL 190, design SF 53a 62 67 68 70 71		173416	173419	173422
Accessories spindle gear 200 A for PRIMAT-FL 190, design SA 53a 61 71		173425	173425	173431
Accessories spindle gear 200 A for PRIMAT-FL 190, design SG 53a 59 62 64 67 68 70 71		173434	173437	173440
Alu cover profile (for type 200 A), 134 mm 10		173443	173446	173449
Bag, design SA (supplementing design SF) 61 65		133937	133937	133940
Bag, design SG (supplementing design SF) 59 64 67		133943	133946	173452
Crank rod, design SA, fully mounted	LE 1000 mm	108362	108365	173347
with coupling funnel and articulated crank	LE 1500 mm	108371	108374	173350
(measure LE = the crank rod's elongated length)	LE 2000 mm	108380	108383	173353
	LE 2500 mm	108389	108392	173356
	LE 3000 mm	108398	108401	173359
Accessories crank rod, design SA for self installation, consisting of: 1 articulated crank, 1 coupling funnel, 2 clamping sleeves 4 x 13 mm		133952	139490	173344

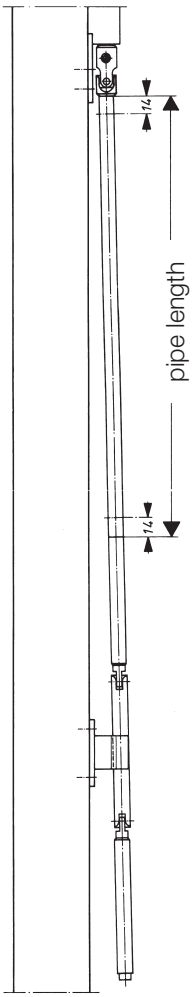

Determining the pipe length

Measure SU minus ..... mm = required pipe length

Design SA	**200 A**	**201 E**	**200 WA**
PRIMAT-FL 190	750 mm	585 mm	440 mm
PRIMAT-A	775 mm	610 mm	465 mm
Design SF	**200 A**	**201 E**	**200 WA**
PRIMAT-FL 190	710 mm	545 mm	400 mm
PRIMAT-A	735 mm	570 mm	425 mm

When using the sliding clutch, make sure to subtract another 47 mm!

Order details custom-made design

1. Labelling: Type (200 A, 200 WA, 201 E, etc.)
2. Colour EV 1, white or black
3. Design: SA, SF, SG, etc.
4. Measure SU
5. For transmissions of the articulation, measure L, FL, MU, MK, LE, v, ü, d or drawing or scale sketch
6. Used fanlight opener or type of bar linkage
7. Number of crank rods (for SA)
8. Page information (right or left)

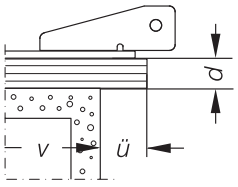

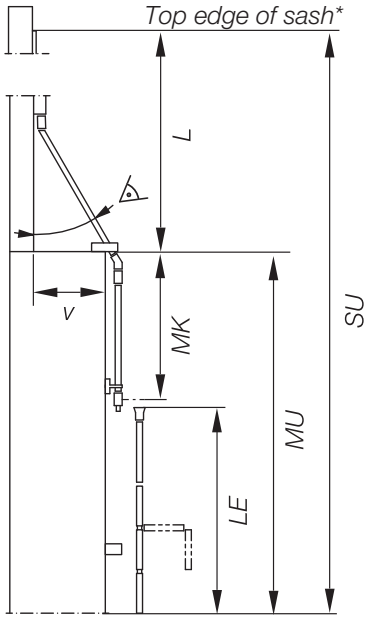

*) When using the fanlight fitting for outward tilt sash PRIMAT-A, measure up to the lower edge of the sash!

Design SF
Stationary crank rod

*) Top edge of sash
PRIMAT-A = lower sash edge!

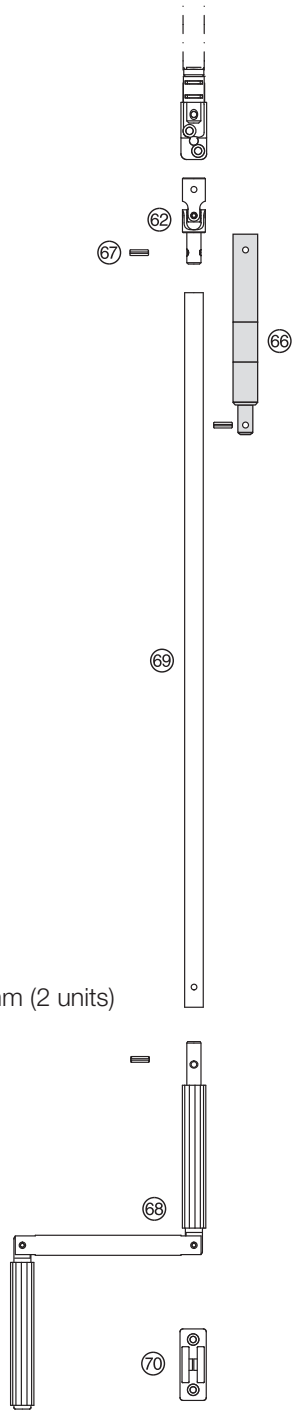

Fitting parts

- 62 Cardan joint 10/16
- 67 Clamping sleeve 4 x 13 mm (2 units)
- 68 Articulated crank
- 69 Alu pipe for crank rod
- 70 Snap-on clip

Optional:
- 66 Sliding clutch

Design SA
Detachable crank rod

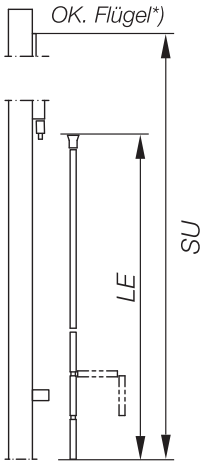

*) Top edge of sash
PRIMAT-A = lower sash edge!

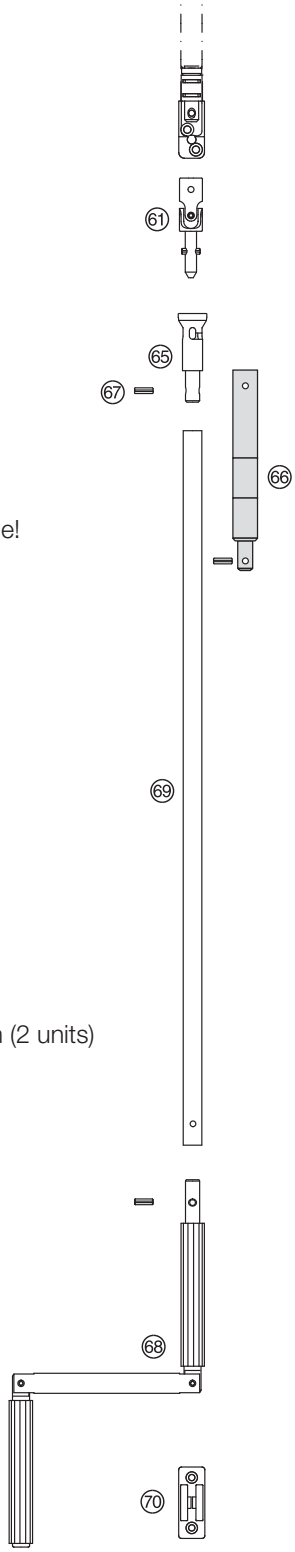

Fitting parts

- 61 Cardan joint 8/16
- 65 Coupling funnel
- 67 Clamping sleeve 4 x 13 mm (2 units)
- 68 Articulated crank
- 69 Alu pipe for crank rod
- 70 Snap-on clip

Optional:
- 66 Sliding clutch

Spindle gears and crank rods

Individual parts, design SF
(stationary crank rod)

		EV 1	white	black
⑥② Cardan joint 10/16 (without clamping sleeve)		108335	108335	108338
⑥⑦ Clamping sleeve 4x13 mm		130391	130391	130391
⑥⑨ Alu pipe for crank rod	Stock length approx. 6000 mm	108455	-	-
	Length 1000 mm	108410	108413	173323
	Length 1500 mm	108419	108422	173326
	Length 2000 mm	108428	108431	173329
	Length 2500 mm	108437	108440	173332
	Length 3000 mm	108446	108449	173335
⑥⑧ Articulated crank		125372	125375	173341
⑦⓪ Snap-on clip		126533	126527	173338
⑥⑥ Sliding clutch		108728	108728	108728

Individual parts, design SA
(detachable crank rod)

		EV 1	white	black
⑥① Cardan joint 8/16 with pin		108341	108341	108344
⑥⑦ Clamping sleeve 4x13 mm		130391	130391	130391
⑥⑨ Alu pipe for crank rod	Stock length approx. 6000 mm	108455	-	-
	Length 1000 mm	108410	108413	173323
	Length 1500 mm	108419	108422	173326
	Length 2000 mm	108428	108431	173329
	Length 2500 mm	108437	108440	173332
	Length 3000 mm	108446	108449	173335
⑥⑧ Articulated crank		125372	125375	173341
⑦⓪ Snap-on clip		126533	126527	173338
⑥⑤ Coupling funnel (without clamping sleeve)		108359	108359	125078
⑥⑥ Sliding clutch		108728	108728	108728

Design SG

for angles lower than 45°
Crank rod with transmission of the articulation, stationary

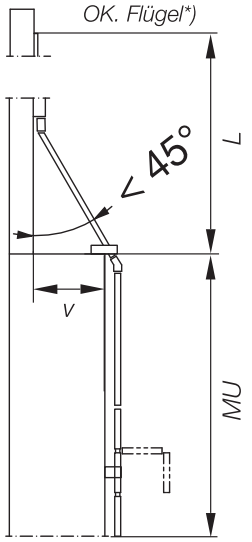

*) PRIMAT-A = lower sash edge!

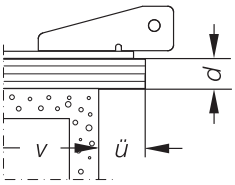

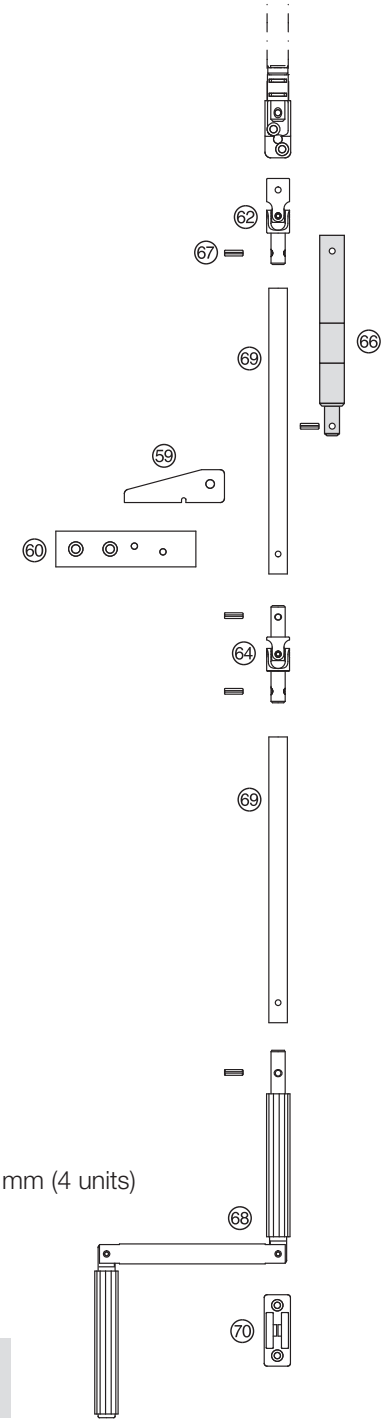

Fitting parts

- 59 Rod guide 1
- 60 Plugging plate for rod guide 1
- 62 Cardan joint 10/16
- 64 Cardan joint 10/10
- 67 Clamping sleeve 4 x 13 mm (4 units)
- 68 Articulated crank
- 69 Alu pipe for crank rod
- 70 Snap-on clip

Optional:
- 66 Sliding clutch

Design SG/A

for angles lower than 45°
Crank rod with transmission of the articulation, detachable

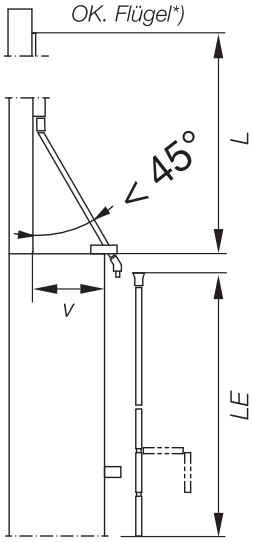

*) PRIMAT-A = lower sash edge!

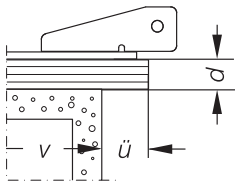

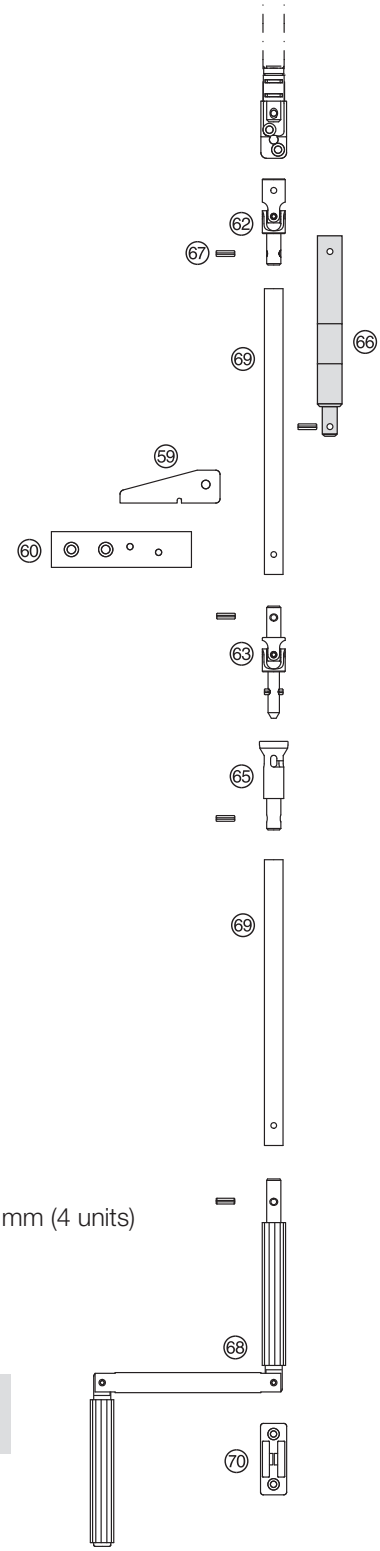

Fitting parts

- 59 Rod guide 1
- 60 Plugging plate for rod guide 1
- 62 Cardan joint 10/16
- 63 Cardan joint 8/10
- 65 Coupling funnel
- 67 Clamping sleeve 4 x 13 mm (4 units)
- 68 Articulated crank
- 69 Alu pipe for crank rod
- 70 Snap-on clip

Optional:
- 66 Sliding clutch

Spindle gears and crank rods

continued

Individual parts, design SG
(crank rod with transmission of the articulation, stationary)

		EV 1	white	black
⑥② Cardan joint 10/16 (without clamping sleeve)		108335	108335	108338
⑥⑦ Clamping sleeve 4x13 mm		130391	130391	130391
⑥⑨ Alu pipe for crank rod	Stock length approx. 6000 mm	108455	-	-
	Length 1000 mm	108410	108413	173323
	Length 1500 mm	108419	108422	173326
	Length 2000 mm	108428	108431	173329
	Length 2500 mm	108437	108440	173332
	Length 3000 mm	108446	108449	173335
⑥⑧ Articulated crank		125372	125375	173341
⑦⓪ Snap-on clip		126533	126527	173338
⑥④ Cardan joint 10/10 (without clamping sleeve)		123437	123437	123440
⑤⑨ Rod guide 1		108329	108332	133976
⑥⓪ Plugging plate for rod guide 1 with screws		133958	133961	173389
⑥⑥ Sliding clutch		108728	108728	108728

Individual parts, design SG/A
(crank rod with transmission of the articulation, detachable)

		EV 1	white	black
⑥② Cardan joint 10/16 (without clamping sleeve)		108335	108335	108338
⑥⑦ Clamping sleeve 4x13 mm		130391	130391	130391
⑥⑨ Alu pipe for crank rod	Stock length approx. 6000 mm	108455	-	-
	Length 1000 mm	108410	108413	173323
	Length 1500 mm	108419	108422	173326
	Length 2000 mm	108428	108431	173329
	Length 2500 mm	108437	108440	173332
	Length 3000 mm	108446	108449	173335
⑥⑧ Articulated crank		125372	125375	173341
⑦⓪ Snap-on clip		126533	126527	173338
⑥③ Cardan joint 8/10 with pin		108347	108347	108350
⑤⑨ Rod guide 1		108329	108332	133976
⑥⓪ Plugging plate for rod guide 1 with screws		133958	133961	173389
⑥⑤ Coupling funnel (without clamping sleeve)		108359	108359	125078
⑥⑥ Sliding clutch		108728	108728	108728

Design SG/2

for angles greater than 45°
Crank rod with transmission of the articulation, stationary

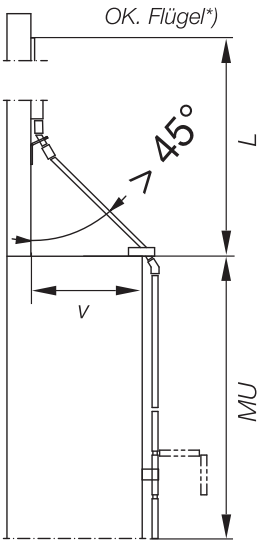

*) PRIMAT-A = lower sash edge!

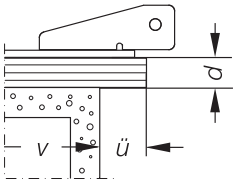

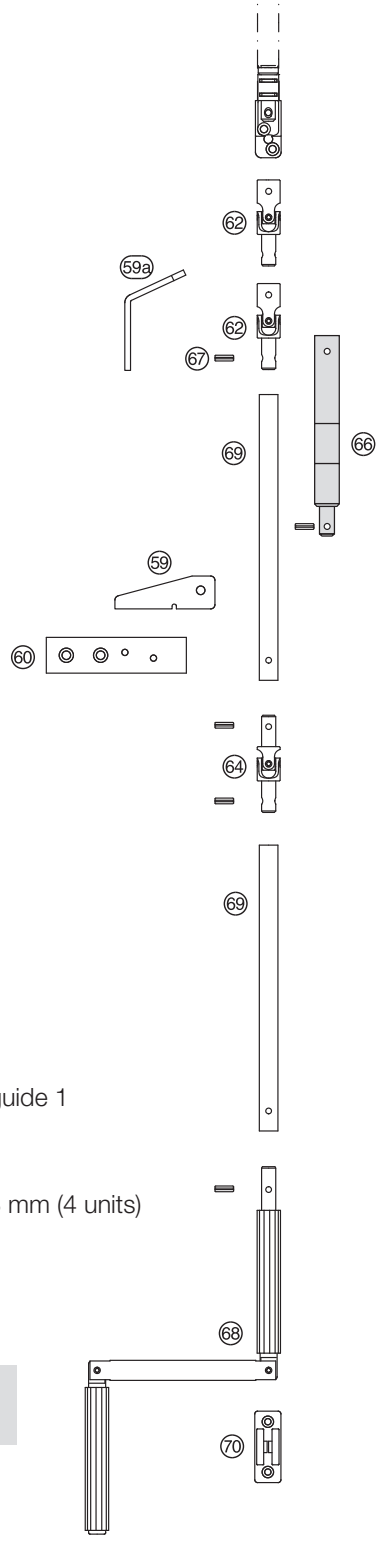

Fitting parts

- 59 Rod guide 1
- 59a Rod guide 2
- 60 Plugging plate for rod guide 1
- 62 Cardan joint 10/16
- 64 Cardan joint 10/10
- 67 Clamping sleeve 4 x 13 mm (4 units)
- 68 Articulated crank
- 69 Alu pipe for crank rod
- 70 Snap-on clip

Optional:
- 66 Sliding clutch

Design SG/A2

for angles greater than 45°
Crank rod with transmission of the articulation, detachable

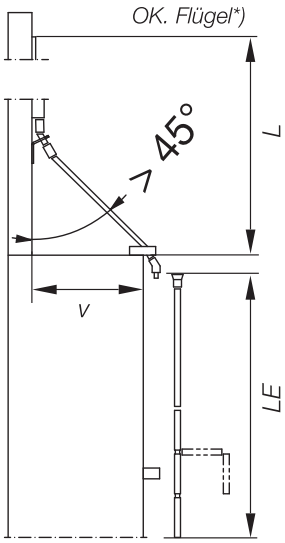

*) PRIMAT-A = lower sash edge!

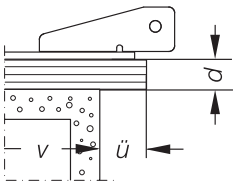

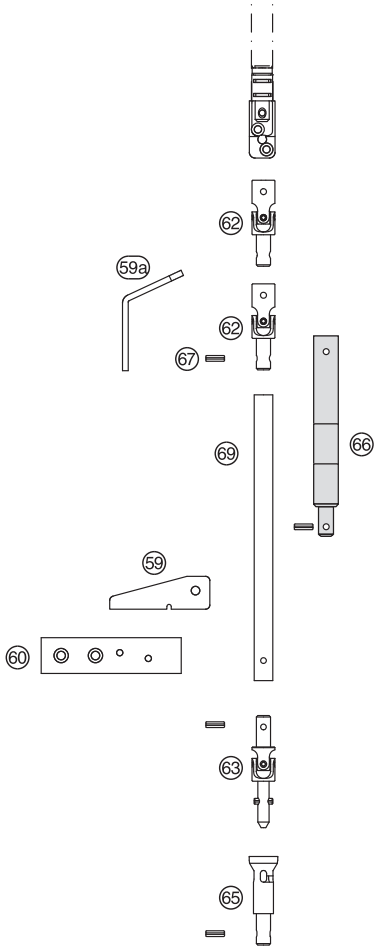

Fitting parts

- 59 Rod guide 1
- 59a Rod guide 2
- 60 Plugging plate for rod guide 1
- 62 Cardan joint 10/16
- 63 Cardan joint 8/10
- 65 Coupling funnel
- 67 Clamping sleeve 4 x 13 mm (4 units)
- 68 Articulated crank
- 69 Alu pipe for crank rod
- 70 Snap-on clip

Optional:
- 66 Sliding clutch

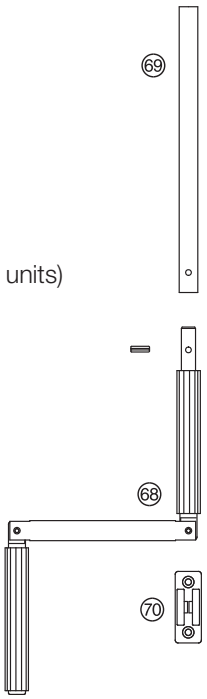

Spindle gears and crank rods

continued

Individual parts, design SG/2
(crank rod with transmission of the articulation, stationary)

		EV 1	white	black
⑥② Cardan joint 10/16 (without clamping sleeve)		108335	108335	108338
⑥⑦ Clamping sleeve 4x13 mm		130391	130391	130391
⑥⑨ Alu pipe for crank rod	Stock length approx. 6000 mm	108455	-	-
	Length 1000 mm	108410	108413	173323
	Length 1500 mm	108419	108422	173326
	Length 2000 mm	108428	108431	173329
	Length 2500 mm	108437	108440	173332
	Length 3000 mm	108446	108449	173335
⑥⑧ Articulated crank		125372	125375	173341
⑦⓪ Snap-on clip		126533	126527	173338
⑥④ Cardan joint 10/10 (without clamping sleeve)		123437	123437	123440
⑤⑨ Rod guide 1		108329	108332	133976
⑥⓪ Plugging plate for rod guide 1 with screws		133958	133961	173389
⑤⑨ⓐ Rod guide 2		133979	142586	142583
⑥⑥ Sliding clutch		108728	108728	108728

Individual parts, design SG/A
(crank rod with transmission of the articulation, detachable)

		EV 1	white	black
⑥② Cardan joint 10/16 (without clamping sleeve)		108335	108335	108338
⑥⑦ Clamping sleeve 4x13 mm		130391	130391	130391
⑥⑨ Alu pipe for crank rod	Stock length approx. 6000 mm	108455	-	-
	Length 1000 mm	108410	108413	173323
	Length 1500 mm	108419	108422	173326
	Length 2000 mm	108428	108431	173329
	Length 2500 mm	108437	108440	173332
	Length 3000 mm	108446	108449	173335
⑥⑧ Articulated crank		125372	125375	173341
⑦⓪ Snap-on clip		126533	126527	173338
⑥③ Cardan joint 8/10 with pin		108347	108347	108350
⑤⑨ Rod guide 1		108329	108332	133976
⑥⓪ Plugging plate for rod guide 1 with screws		133958	133961	173389
⑤⑨ⓐ Rod guide 2		133979	142586	142583
⑥⑤ Coupling funnel (without clamping sleeve)		108359	108359	125078
⑥⑥ Sliding clutch		108728	108728	108728

Design SG/1

for angles lower than 45°
Crank rod with transmission of the articulation, stationary

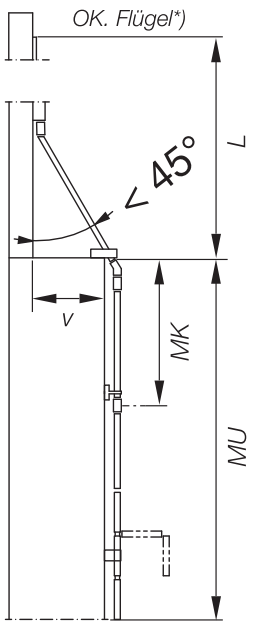

*) PRIMAT-A = lower sash edge!

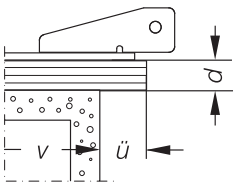

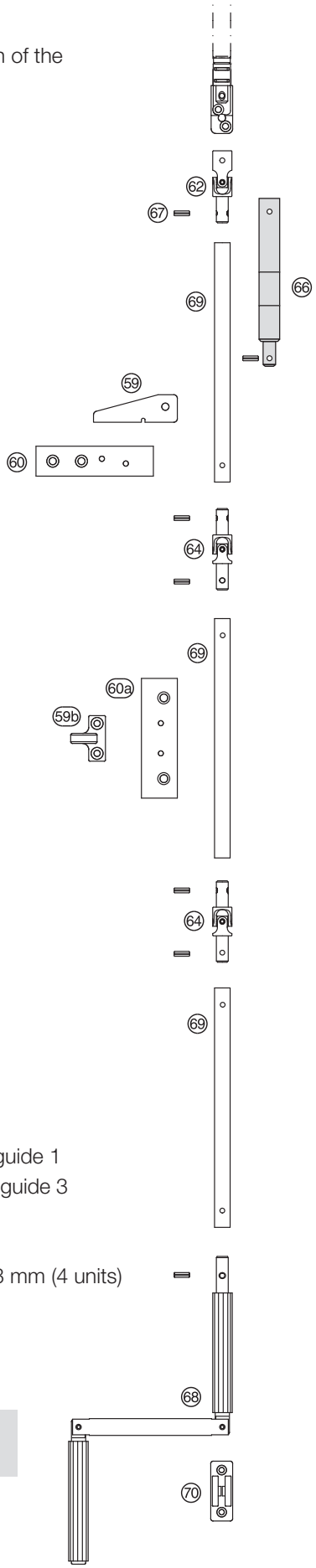

Fitting parts

- 59 Rod guide 1
- 59b Rod guide 3
- 60 Plugging plate for rod guide 1
- 60a Plugging plate for rod guide 3
- 62 Cardan joint 10/16
- 64 Cardan joint 10/10
- 67 Clamping sleeve 4 x 13 mm (4 units)
- 68 Articulated crank
- 69 Alu pipe for crank rod
- 70 Snap-on clip

Optional:
- 66 Sliding clutch

Design SG/A1

for angles lower than 45°
Crank rod with transmission of the articulation, detachable

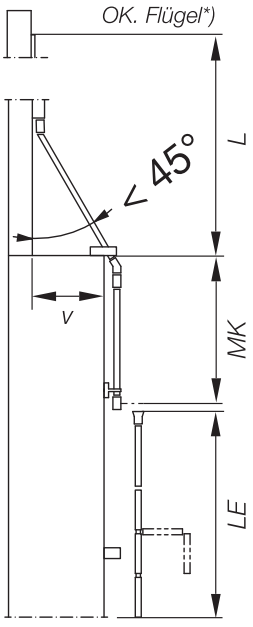

*) PRIMAT-A = lower sash edge!

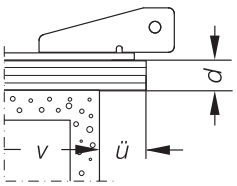

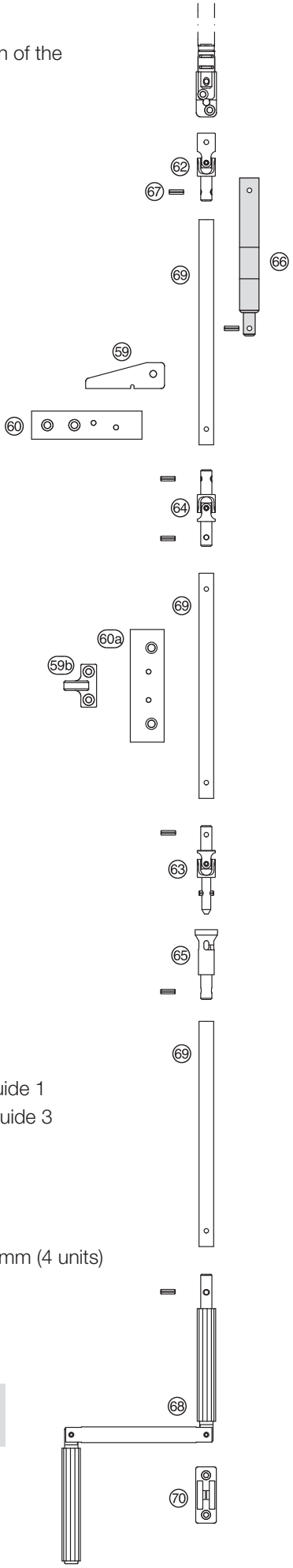

Fitting parts

- 59 Rod guide 1
- 59b Rod guide 3
- 60 Plugging plate for rod guide 1
- 60a Plugging plate for rod guide 3
- 62 Cardan joint 10/16
- 63 Cardan joint 8/10
- 64 Cardan joint 10/10
- 65 Coupling funnel
- 67 Clamping sleeve 4 x 13 mm (4 units)
- 68 Articulated crank
- 69 Alu pipe for crank rod
- 70 Snap-on clip

Optional:
- 66 Sliding clutch

Spindle gears and crank rods continued

Individual parts, design SG/1
(crank rod with transmission of the articulation, stationary)

		EV 1	white	black
⑥② Cardan joint 10/16 (without clamping sleeve)		108335	108335	108338
⑥⑦ Clamping sleeve 4x13 mm		130391	130391	130391
⑥⑨ Alu pipe for crank rod	stock length approx. 6000 mm	108455	-	-
	Length 1000 mm	108410	108413	173323
	Length 1500 mm	108419	108422	173326
	Length 2000 mm	108428	108431	173329
	Length 2500 mm	108437	108440	173332
	Length 3000 mm	108446	108449	173335
⑥⑧ Articulated crank		125372	125375	173341
⑦⓪ Snap-on clip		126533	126527	173338
⑥④ Cardan joint 10/10 (without clamping sleeve)		123437	123437	123440
⑤⑨ Rod guide 1		108329	108332	133976
⑥⓪ Plugging plate for rod guide 1 with screws		133958	133961	173389
⑤⑨ⓑ Rod guide 3		133211	133214	133217
⑥⓪ⓐ Plugging plate for rod guide 3 with screws		133967	133970	133973
⑥⑥ Sliding clutch		108728	108728	108728

Individual parts, design SG/A1
(crank rod with transmission of the articulation, detachable)

		EV 1	white	black
⑥② Coupling funnel (without clamping sleeve)		108359	108359	125078
⑥⑦ Clamping sleeve 4x13 mm		130391	130391	130391
⑥⑨ Alu pipe for crank rod	stock length approx. 6000 mm	108455	-	-
	Length 1000 mm	108410	108413	173323
	Length 1500 mm	108419	108422	173326
	Length 2000 mm	108428	108431	173329
	Length 2500 mm	108437	108440	173332
	Length 3000 mm	108446	108449	173335
⑥⑧ Articulated crank		125372	125375	173341
⑦⓪ Snap-on clip		126533	126527	173338
⑥④ Cardan joint 10/10 (without clamping sleeve)		123437	123437	123440
⑤⑨ Rod guide 1		108329	108332	133976
⑥⓪ Plugging plate for rod guide 1 with screws		133958	133961	173389
⑤⑨ⓑ Rod guide 3		133211	133214	133217
⑥⓪ⓐ Plugging plate for rod guide 3 with screwsn		133967	133970	133973
⑥③ Cardan joint 8/10 with pin		108347	108347	108350
⑥⑤ Coupling funnel (without clamping sleeve)		108359	108359	125078
⑥⑥ Sliding clutch		108728	108728	108728

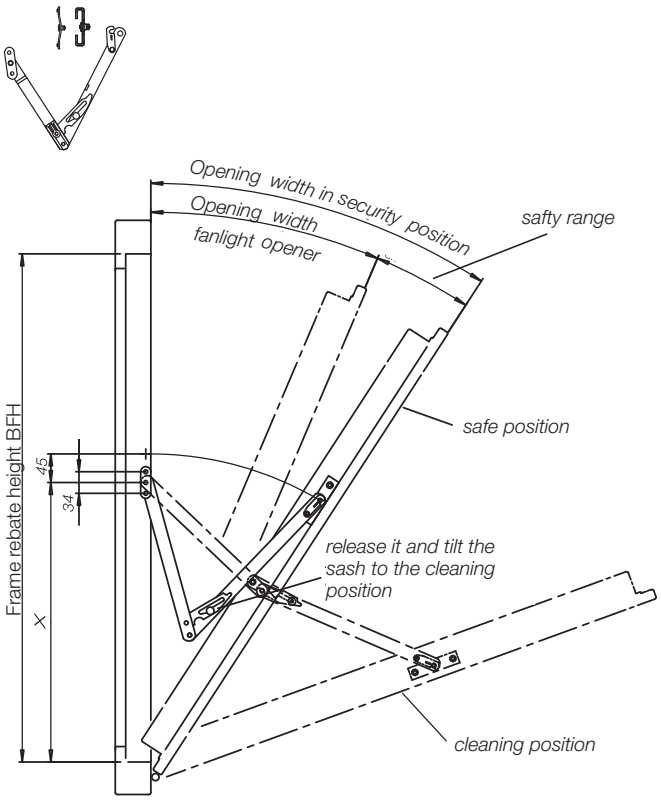

Ranges of application for PRIMAT-FL 190				
Frame rebate height BFH	Stays	Measure x	Opening width in security position	Opening width in cleaning position
240 - 300 mm	size 0	170 mm	approx. 220 - 255 mm	approx. 90°
300 - 350 mm	size 1	210 mm	approx. 220 - 255 mm	approx. 86°
350 - 400 mm	size 1	250 mm	approx. 220 - 255 mm	approx. 73°
400 - 500 mm	size 1	290 mm	approx. 220 - 270 mm	approx. 62°
500 - 600 mm	size 2	320 mm	approx. 220 - 255 mm	approx. 90°
600 - 700 mm	size 2	370 mm	approx. 220 - 255 mm	approx. 80°
700 - 800 mm	size 2	440 mm	approx. 220 - 250 mm	approx. 68°
800 - 1200 mm	size 2	500 mm	approx. 220 - 330 mm	approx. 60°

Installation note: The security stays KSP are to be installed in such a way that there is a safety area of 50 to 100 mm between the open position of the fanlight opener and the security position of the stays. Use alternative catch stays for frame rebate heights of 1200 or greater (see p. 50).

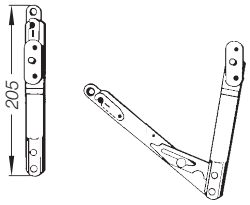

KSP stay size 0

Application diagram for security stay KSP, **application in pairs**.

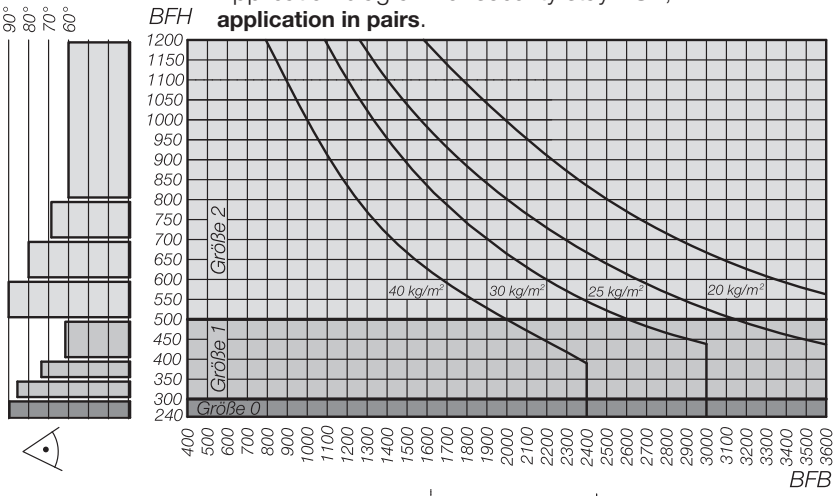

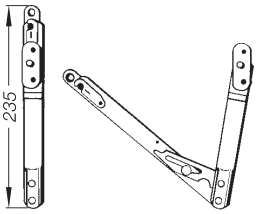

KSP stay size 1

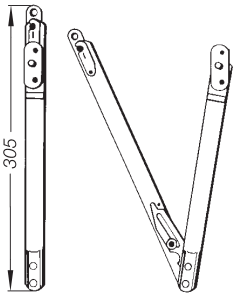

KSP stay size 2

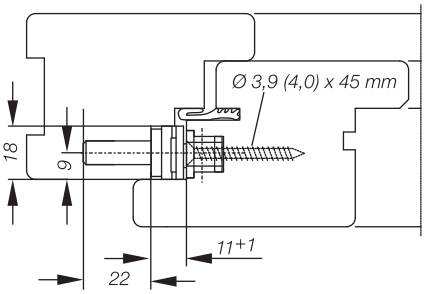

Vertical section KSP on the timber window

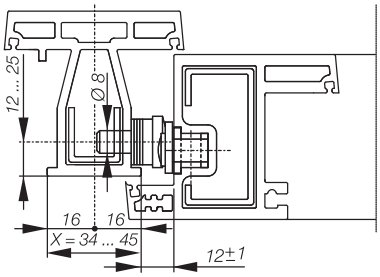

Special case:
Vertical section KSP EBZ 16 mm on the PVC window

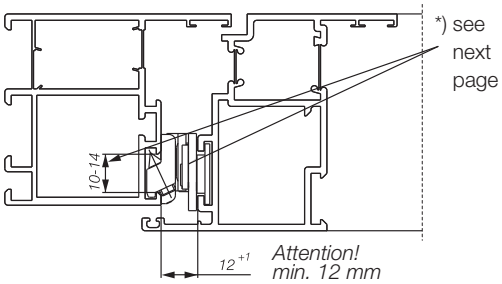

Vertical section KSP on the aluminium window

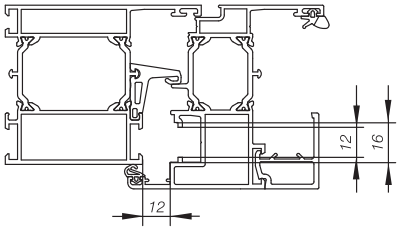

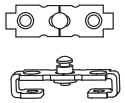

Screw plate for 16 mm fittings groove

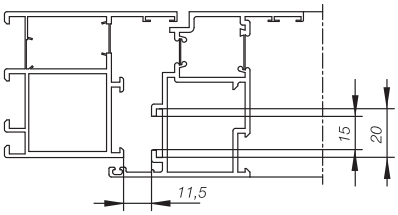

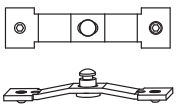

Clamping plate for Alu fittings groove 15/20

Security stay KSP

Packing units for timber and PVC windows	
1 pair of KSP stays, size 0	140933
1 pair of KSP stays, size 1	140927
1 pair of KSP stays, size 2	140930

Packing units for PVC windows (special case) with a short mounting pin (EBZ)	
1 pair of KSP stays EBZ 16 mm, size 0	300254
1 pair of KSP stays EBZ 16 mm, size 1	300255
1 pair of KSP stays EBZ 16 mm, size 2	300256

Bulk packing for timber and PVC windows	
KSP stays, size 1, pack of 10 (in pairs)	142146
KSP stays, size 2, pack of 10 (in pairs)	142149

Accessories for timber and PVC windows	
Packer for KSP stay, thickness 1 mm	117548
Packer for KSP stay, thickness 3 mm	153667
Packer for KSP stay, thickness 6 mm	128057
Packer for KSP stay, for beveled rebate profiles	136868
Jig with frame clamping plate, without sash clamping plate	117413

Additional packers in the profile overview on www.HAUTAU.de

Individual parts for aluminium windows with frame clamping plate, without sash clamping plate

KSP stay, size 1, Alu 10 to 12 mm	left	187873
	right	187870
KSP stay, size 2, Alu 10 to 12 mm	left	187879
	right	187876
KSP stay, size 1, Alu 12.1 to 14 mm	left	187885
	right	187882
KSP stay, size 2, Alu 12.1 to 14 mm	left	187891
	right	187888

Sash clamping plate/screw plate for aluminium windows	
Alu fittings groove 15/20	154702
16 mm fittings groove	117401

Additional clamping plates in the overview on www.HAUTAU.de

Installation instructions KSP	131219

Note:

In some cases, a special screw bush may be required when installing our restrictors or our holding and security stays in combination with a central locking (Item Code: 200543).

*) Note the vertical section KSP on aluminium windows shown on the previous page:
for 10 to 12 mm: Stay KSP Alu 10 to 12 mm
for 12.1 to 14 mm: Stay KSP Alu 12.1 to 14 mm

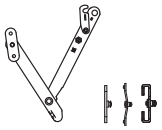

Restrictor No. 113

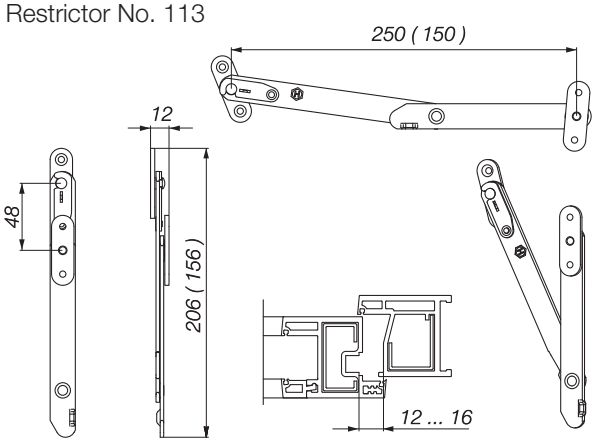

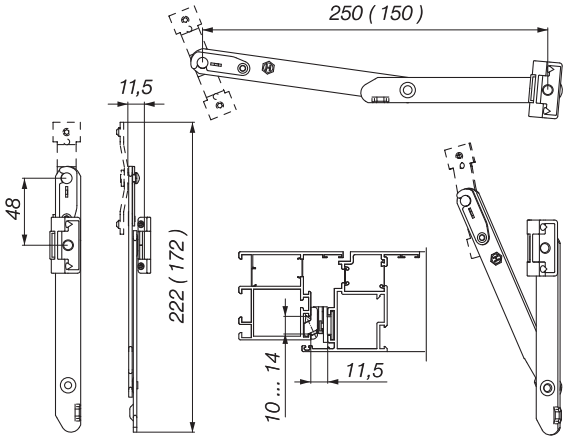

Restrictor No. 114

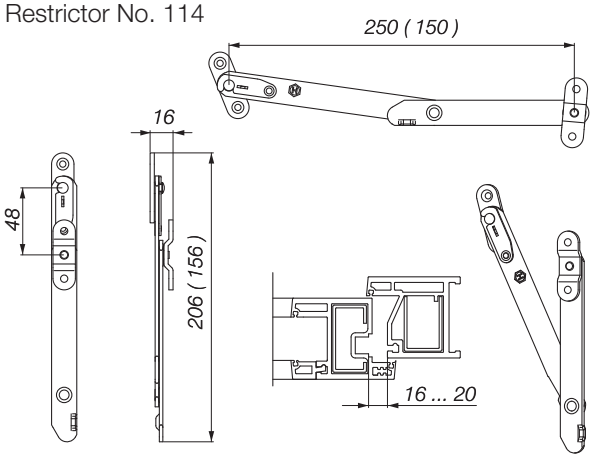

Installation note:
The security stays KSP are to be installed in such a way that there is a safety range of 50 to 100 mm between the open position of the fanlight opener and the security position of the stays.

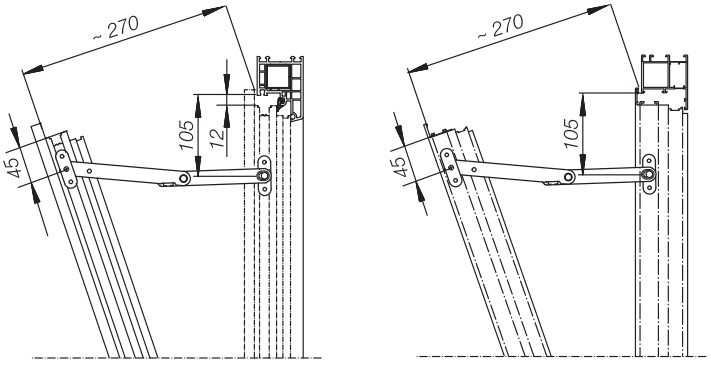

Restrictor on PVC and aluminium windows

Application diagram for restrictors, application in pairs.

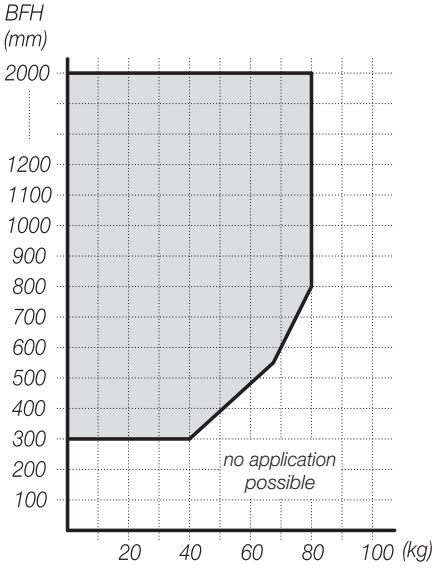

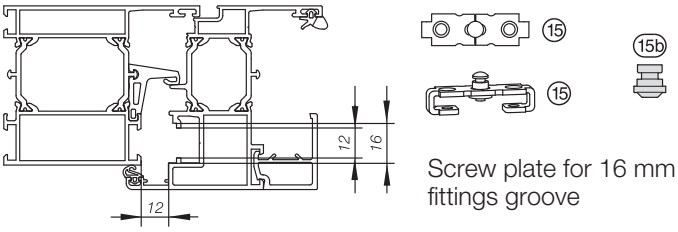

Screw plate for 16 mm fittings groove

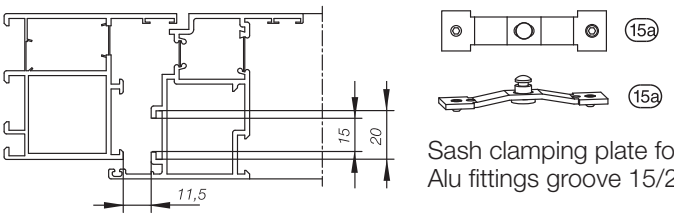

Sash clamping plate for Alu fittings groove 15/20

Restrictors 113 and 114

Packing units	
Restrictors No. 113, span width 300 mm, 1 Paar	229438
Restrictors No. 113, span width 250 mm, 1 pair	190510
Restrictors No. 113, span width 150 mm, 1 pair	190516
Restrictors No. 114, span width 300 mm, 1 Paar	229441
Restrictors No. 114, span width 250 mm, 1 pair	190513
Restrictors No. 114, span width 150 mm, 1 pair	190519

Bulk packing for timber and PVC windows	
Restrictors No. 113, span width 250 mm, 10 pairs	159576
Restrictors No. 113, span width 150 mm, 10 pairs	159585
Restrictors No. 114, span width 250 mm, 10 pairs	159579
Restrictors No. 114, span width 150 mm, 10 pairs	159588

Individual parts for timber and PVC windows				
Restrictors No. 113, span width 300 mm	left	196706	right	196703
Restrictors No. 113, span width 250 mm	left	159630	right	159627
Restrictors No. 113, span width 150 mm	left	159648	right	159645
Restrictors No. 114, span width 300 mm	left	196712	right	196709
Restrictors No. 114, span width 250 mm	left	159636	right	159633
Restrictors No. 114, span width 150 mm	left	159654	right	159651

Individual parts for aluminium windows with frame clamping plate, without sash clamping plate				
Restrictor No. 113, span width 300 mm, Alu 10 - 12 mm	left	196946	right	196943
Restrictor No. 113, span width 300 mm, Alu 12.1 - 14 mm	left	196952	right	196949
Restrictor No. 113, span width 250 mm, Alu 10 - 12 mm	left	185931	right	185928
Restrictor No. 113, span width 250 mm, Alu 12.1 - 14 mm	left	185314	right	185934
Restrictor No. 113, span width 150 mm, Alu 10 - 12 mm	left	185919	right	185916
Restrictor No. 113, span width 150 mm, Alu 12.1 - 14 mm	left	185925	right	185922

Sash clamping plate/screw plate for aluminium windows	
16 mm fittings groove ⑮	117401
Sleeve 10,0 x 10,2 ⑮b	200543
Alu fittings groove 15/20 ⑮a	154702

Additional clamping plates available on request

Note: In some cases, a special screw bush may be required when installing our restrictors or our holding and security stays in combination with a central locking (Item Code 200543).

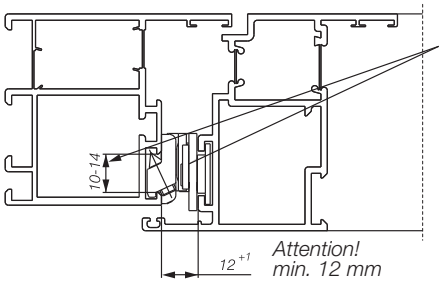

For 10 to 12 mm:
Restrictor, holding stay Alu 10-12
For 12.1 to 14 mm:
Restrictor, holding stay Alu 12.1-14

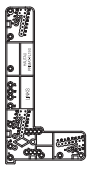

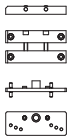

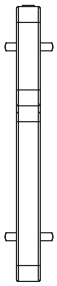

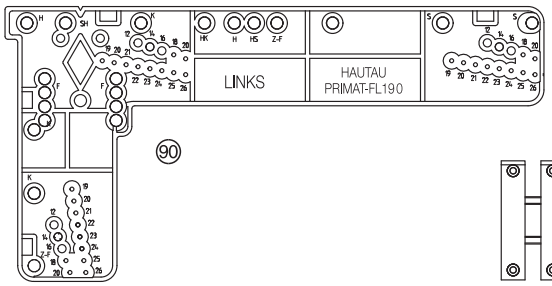

90

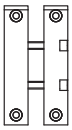

91

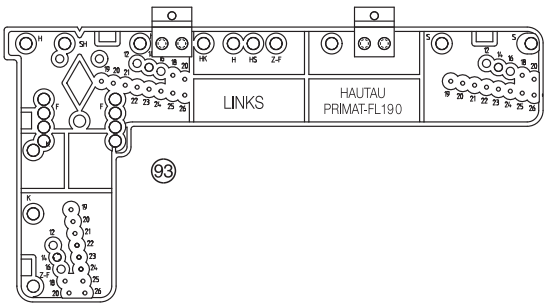

93

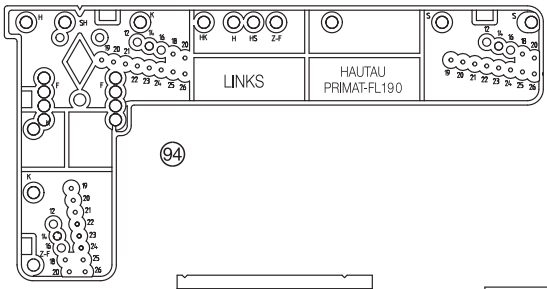

94

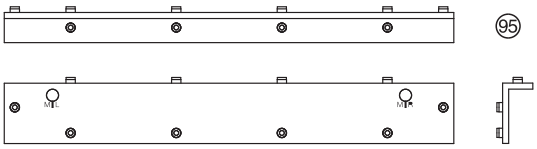

95

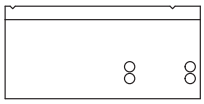

92

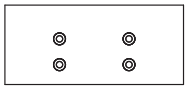

96

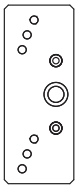

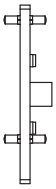

97

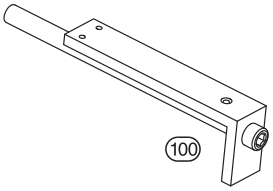

100

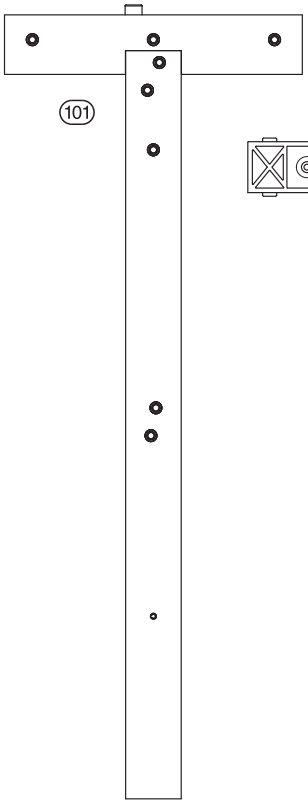

101

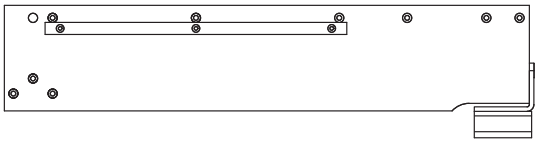

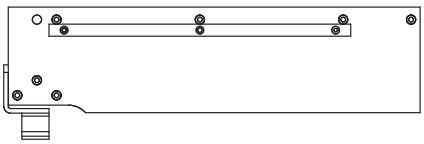

103

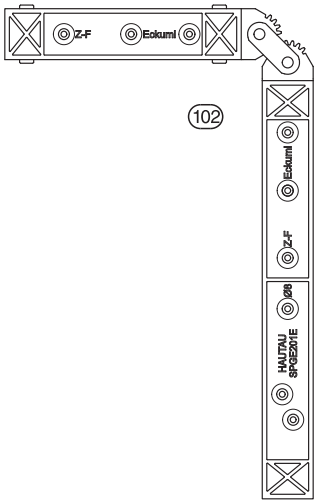

102

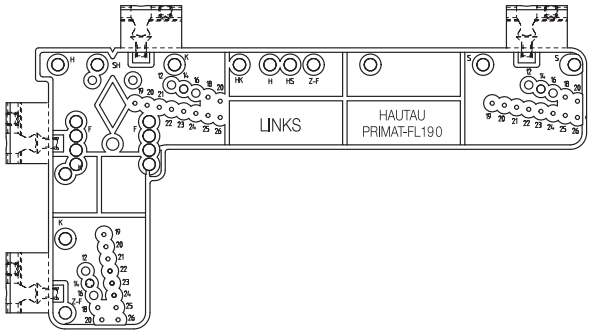

105

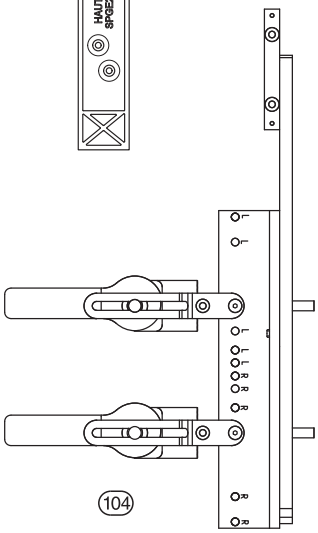

104

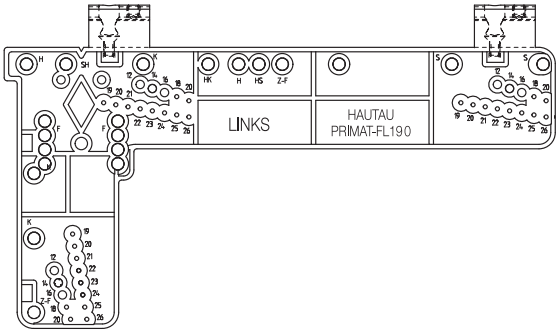

Jigs

Packing units

⑨⓪ Jig PRIMAT-FL190 (Stay holder, universal sash bracket, corner, lever)	172864
⑨① Jig top mounted sash bracket	107366
⑨③ Jig PRIMAT-A corner	108209
⑨④ Jig PRIMAT-A lever	108212
⑨⑤ Jig PRIMAT-A stay	108203
⑨⑥ Jig PRIMAT-A sash bracket	108206
⑨② Jig PRIMAT-FL190 timber window	217488
⑨⑦ Jig security stay KSP	117413
⑩⓪ Jig crank rod for Alu pipe (spindle gear)	156737
⑩① Jig spindle gear 200 A/WA	108716
⑩② Jig spindle gear 200 E	139586
⑩③ Jig flexible rod (double-stay)	133586
⑩④ Jig transmission for curtain walling	172433
⑩⑤ Rod jig PRIMAT-FL 190 for batch production (round rod for 8 mm necessary)	177961

Additional jigs available on request

PRIMAT-S kompakt 195

Device properties

- Low noise
- Opening width 190 mm
- Adjustable opening width (100 mm, 190 mm)
- Small design with low space requirements on the frame
- Including sash bracket with cap ① for straight and bevel windows
- Including jig (paperboard)
- Increased contact pressure thanks to additional third locking inside the stay
- Two-stay version for wide windows
- Sash suspension with security knob
- Maintenance-free stay with anti-dirt profiling inside the stay
- Integrated limit stop and overload cutoff
- Optional coupling angle in combination with additional lockings

Accessories

- Coupling angle for additional locking ZV/F ②

Tools

- Jig

Range of application

For sashes made of wood, PVC, aluminium and composite material.

Suitable for ventilation systems.

Application area	1stay	2stay
FH min.	300 mm	300 mm
FB min. without ZV/F	500 mm	1201 mm
FB max. without ZV/F	1200 mm	2400 mm
FB min. with ZV/F	720 mm	1601 mm
FB max. with ZV/F	1600 mm	2400 mm 2800 mm (with devided ZV/F and 2 coupling angles)

①

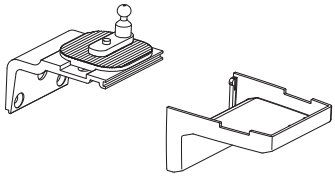

②

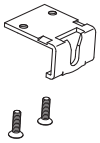

Installation examples

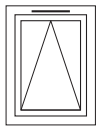

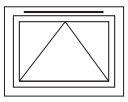

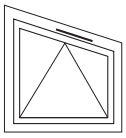

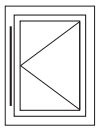

Note: The configuration software and the USB adapter cable are necessary for changing the stroke (look drive accessories page 52)

PRIMAT-S kompakt 195

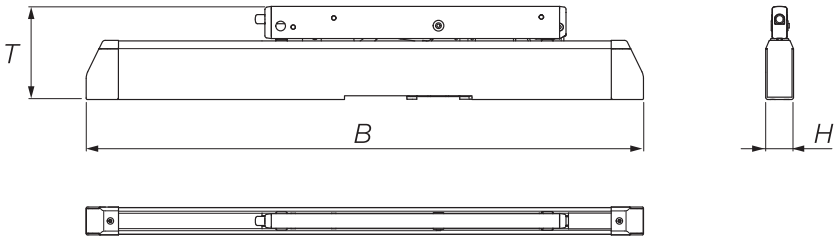

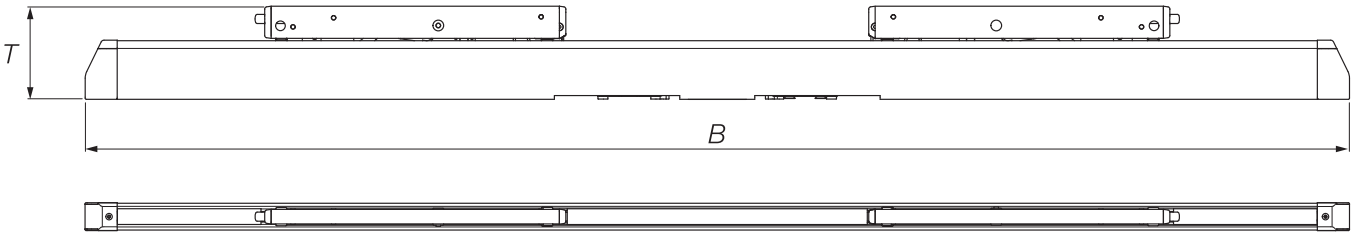

Technical specifications

PRIMAT-S kompakt 195	single stay	double stay
Rated voltage (V)	24	24
Voltage tolerance range (%)	-10 / +30	-10 / +30
Remaining ripple (%)	10	10
Current consumption (A)	0,7	0,7
Starting current (A)	0,9	0,9
Compressive force (N)	75	75
Tractive force (N)	75	75
Locking force (N)	1500	3000
Stroke/opening width (in mm)	190	190
Opening mechanism	stay	stay
Running period	ca. 38 s	ca. 38 s
Duty cycle	60s on / 60s off	60s on / 60s off
Ambient temperature	0 °C to +65 °C	0 °C to +65 °C
Protection class	IP20	IP20
Cutoff open	limit switch	limit switch
Cutoff closed	limit switch	limit switch
Connection technology	plug-in screw terminal, max. 1 mm²	
Dimensions (B x H x T in mm)	520 x 26 x 88	1180 x 26 x 88
Housing	aluminium	aluminium
Scope of delivery	including sash bracket	including sash bracket
Lifespan (Open/Closed cycles)	11.000	11.000

Item code		single stay		double stay	
		stroke 100 mm	stroke 190 mm	stroke 100 mm	stroke 190 mm
	EV 1	245185	239588	245209	239606
	RAL 9016	245188	239591	245212	239609
	RAL 9005	245191	239594	245215	239612

other colours on request

Coupling angle ZV/F

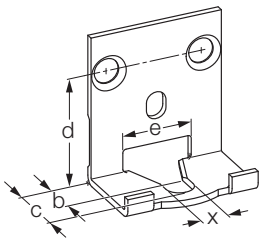

x	b	c	d	e	Item Code
8,3	10	20,5	33,5	21	243688
9,5	10	21,5	32	22	243694
11,5	10	22,5	32	23	243700
11,5	5	22,5	32	23	243706
10,7	9	22	38	23	243712
10,7	9	22	35,5	23	243718
10,7	9	22	32	23	243724

PRIMAT-S kompakt 300

Device properties

- Opening width 300 mm
- Increased contact pressure thanks to additional third locking inside the stay
- Two-stay version for wide windows
- Sash suspension with security knob
- Maintenance-free stay with anti-dirt profiling inside the stay
- Integrated limit stop and overload cutoff
- Optional drive pin in combination with additional lockings
- Compact design with low space requirements on the frame

Accessories

- Sash bracket with cap ①
- Bevel window sash bracket with cap ②
- Coupling track for additional locking ZV/F ③
- Drive track, additional for 1-stay design ④
- Drive track, additional for 2-stay design ⑤

Tools

- Jig

Range of application

For sashes made of wood, PVC, aluminium and composite material.
Suitable for ventilation systems.

Installation examples

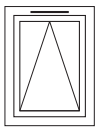

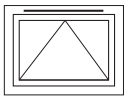

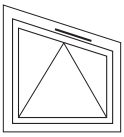

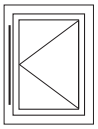

TÜV NORD
TÜV NORD CERT GmbH
Baumuster geprüft

① 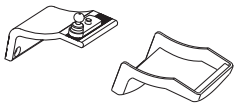

② 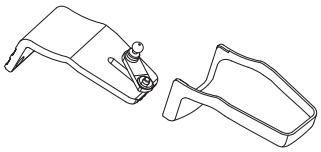

③ 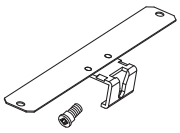

④ 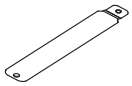

⑤ 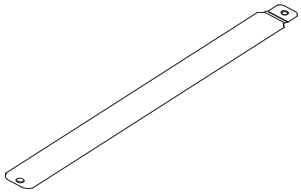

PRIMAT-S kompakt 300

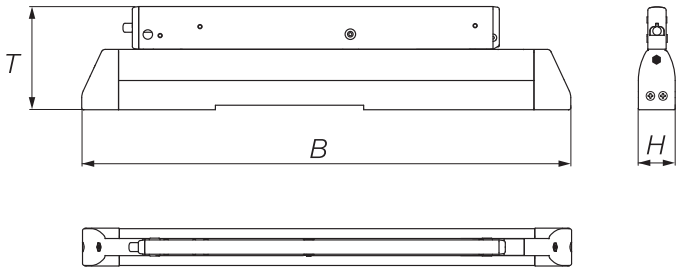

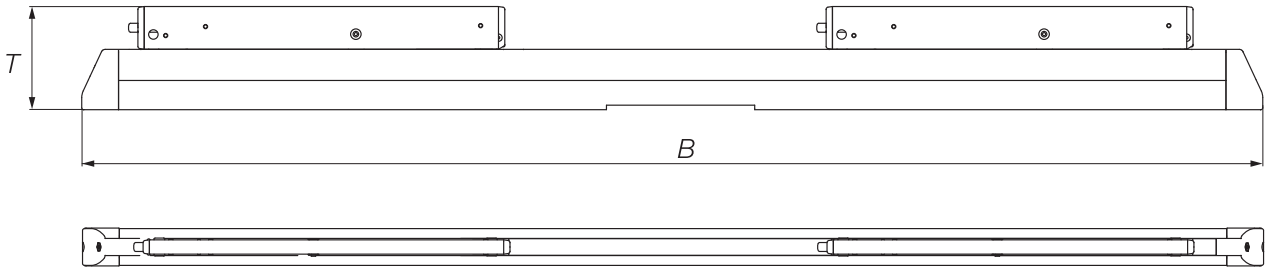

Technical specifications

PRIMAT-S kompakt 300	single stay	double stay
Rated voltage (V)	24	24
Voltage tolerance range (%)	-10 / +30	-10 / +30
Remaining ripple (%)	10	10
Current consumption (A)	0,35	0,35
Starting current (A)	0,5	0,5
Compressive force (N)	80	80
Tractive force (N)	80	80
Locking force (N)	1500	3000
Stroke/opening width (in mm)	300	300
Opening mechanism	stay	stay
Running period	50s	50s
Duty cycle	60s on / 60s off	60s on / 60s off
Ambient temperature	0 °C to +70 °C	0 °C to +70 °C
Protection class	IP40	IP40
Cutoff open	limit switch	limit switch
Cutoff closed	limit switch	limit switch
Connection technology	plug-in screw terminal, max. 1 mm^2	
Dimensions (B x H x T in mm)	512 x 36 x 100	1210 x 36 x 100
Housing	aluminium	aluminium
Scope of delivery	including sash bracket	including sash bracket
Lifespan (Open/Closed cycles)	10.000	10.000

Item code		
EV 1	193980	193989
RAL 9016	193983	193992
RAL 9005	193986	193995

other strokes on request

Item code accessories	RAL 7035	RAL 9016	RAL 9005
Sash bracket with cap	195104	190462	190465
Bevel window sash bracket with cap	195107	184452	184455
Coupling track for additional locking ZV/F	Measure x = 8,3 mm		179608
	Measure x = 9,5 mm		179611
	Measure x = 11,5 mm		185188
Drive track, additional for single stay design			192904
Drive track, additional for ZV/F with 2-stay design			192910

PRIMAT-S kompakt A

Device properties

- Opening width 95 - 190 mm adjustable
- Increased contact pressure thanks to integrated locking
- Single, double, triple version
- Integrated limit stop and overload cutoff
- Compact design with low space requirements on the frame

Accessories

- Accessories sash bracket R 0-25 ①
- Accessories sash bracket R 26-50 ②
- Accessories sash bracket R 51-75 ③
- Accessories sash bracket R 76-100 ④

Range of application

For sashes made of wood, PVC, aluminium and composite material.

Suitable for ventilation systems.

Installation examples

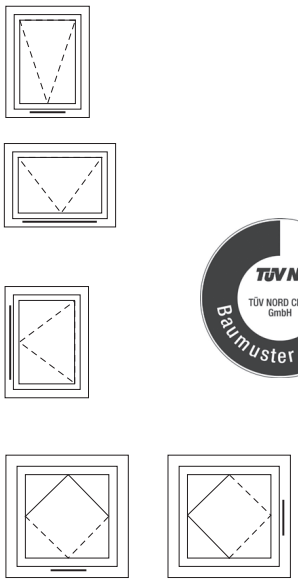

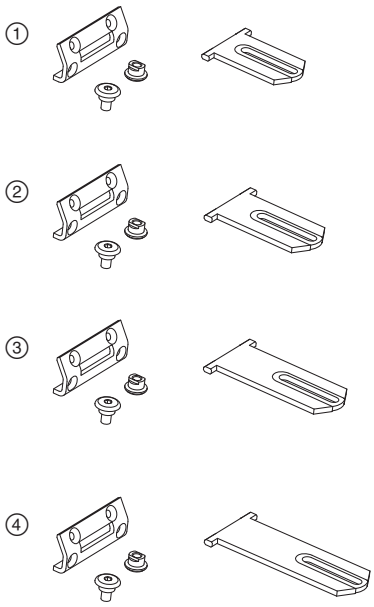

PRIMAT-S kompakt A

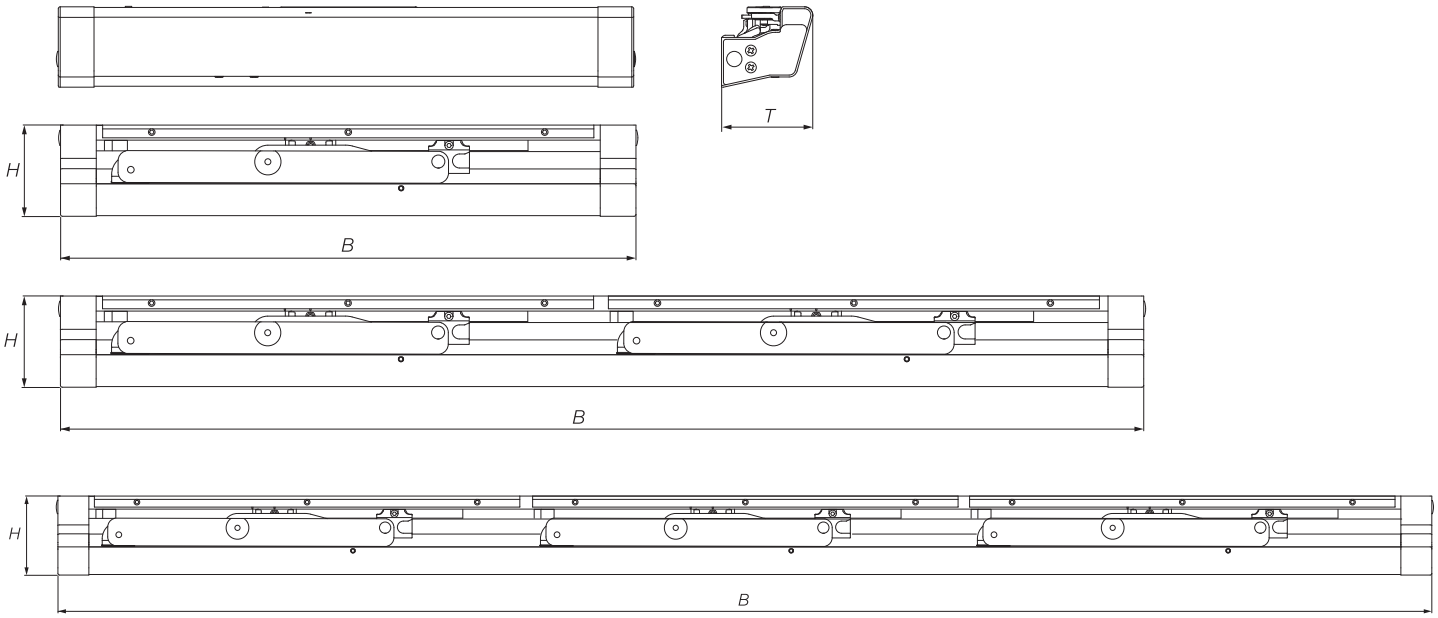

Technical specifications

PRIMAT-S kompakt A	single stay	double stay	triple stay
Rated voltage (V)	24	24	24
Voltage tolerance range (%)	-30 / +30	-30 / +30	-30 / +30
Remaining ripple (%)	10	10	10
Current consumption (A)	0,35	0,35	0,35
Starting current (A)	0,5	0,5	0,5
Compressive force (N)	50	80	80
Tractive force (N)	50	80	80
Locking force (N)	8000	16.000	24.000
Stroke/opening width (in mm)	190	190	190
Opening mechanism	stay	stay	stay
Running period	40s	40s	40s
Duty cycle	60s on / 60s off	60s on / 60s off	60s on / 60s off
Ambient temperature	0 °C to +70 °C	0 °C to +70 °C	0 °C to +70 °C
Protection class	IP40	IP40	IP40
Cutoff open	limit switch	limit switch	limit switch
Cutoff closed	limit switch	limit switch	limit switch
Connection technology	plug-in screw terminal, max. 1 mm^2		
Dimensions (B x H x T in mm)	452 x 72 x 63 **(FB 450-1000)**	1001 x 72 x 63 **(FB 1001-1500)** 1501 x 72 x 63 **(FB 1501-2000)**	2001 x 72 x 63 **(FB 2001-2500)** 2501 x 72 x 63 **(FB 2501-3000)**
Housing	aluminium	aluminium	aluminium
Scope of delivery	without sash bracket	without sash bracket	without sash bracket
Lifespan (Open/Closed cycles)	10.000	10.000	10.000

Item code

EV 1	194921 **(FB 450-1000)**	203001 **(FB 1001-1500)** 206377 **(FB 1501-2000)**	203019 **(FB 2001-2500)** 206395 **(FB 2501-3000)**
RAL 9016	194924 **(FB 450-1000)**	203004 **(FB 1001-1500)** 206380 **(FB 1501-2000)**	203022 **(FB 2001-2500)** 206398 **(FB 2501-3000)**
RAL 9005	194927 **(FB 450-1000)**		

other strokes on request

Item code accessories

Accessories sash bracket R 0-25	200200
Accessories sash bracket R 26-50	200203
Accessories sash bracket R 51-75	200206

PRIMAT-E kompakt 195

Device properties

- Low noise
- Opening width 190 mm
- Adjustable opening width (100 mm, 190 mm)
- Small design with low space requirements on the frame
- Including sash bracket with cap ① for straight and bevel windows
- Including jig (paperboard)
- Increased contact pressure thanks to additional third locking inside the stay
- Two-stay version for wide windows
- Sash suspension with security knob
- Maintenance-free stay with anti-dirt profiling inside the stay
- Integrated limit stop and overload cutoff
- Optional coupling angle in combination with additional lockings

Accessories

- Coupling angle for additional locking ZV/F ②

Tools

- Jig

Range of application

For sashes made of wood, PVC, aluminium and composite material.

Suitable for ventilation systems.

Application area	1stay	2stay
FH min.	300 mm	300 mm
FB min. without ZV/F	500 mm	1201 mm
FB max. without ZV/F	1200 mm	2400 mm
FB min. with ZV/F	720 mm	1601 mm
FB max. with ZV/F	1600 mm	2400 mm 2800 mm (with devided ZV/F and 2 coupling angles)

①

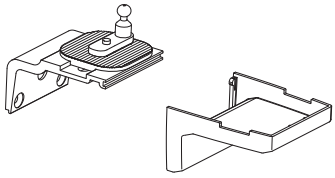

②

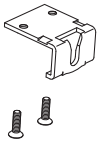

Installation examples

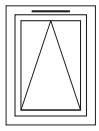

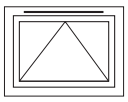

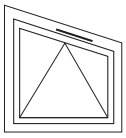

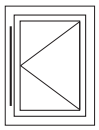

Note: The configuration software and the USB adapter cable are necessary for changing the stroke (look drive accessories page 52)

PRIMAT-E kompakt 195

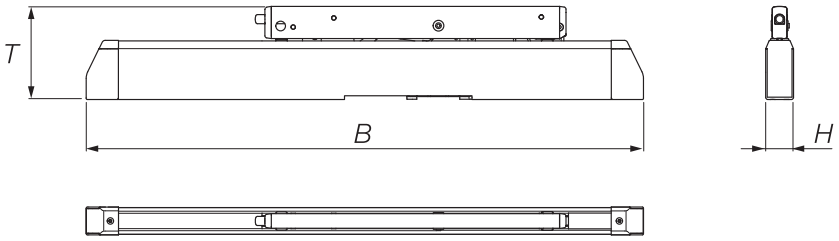

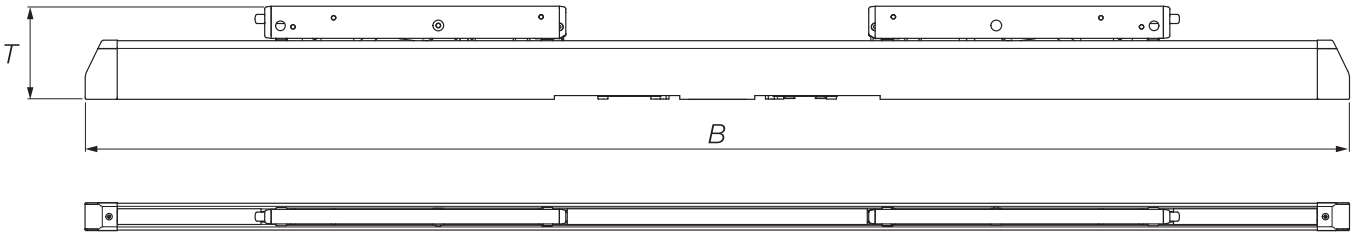

Technical specifications

PRIMAT-E kompakt 195	single stay	double stay
Rated voltage (V)	230	230
Voltage tolerance range (%)	-10 / +10	-10 / +10
Current consumption (A)	0,08	0,08
Compressive force (N)	75	75
Tractive force (N)	75	75
Locking force (N)	1500	3000
Stroke/opening width (in mm)	190	190
Opening mechanism	stay	stay
Running period	ca. 38 s	ca. 38 s
Duty cycle	60 s on / 60 s off	60 s on / 60 s off
Ambient temperature	0 °C to +65 °C	0 °C to +65 °C
Protection class	IP20	IP20
Cutoff open	limit switch	limit switch
Cutoff closed	limit switch	limit switch
Connection technology	plug-in screw terminal, max. 1 mm²	
Dimensions (B x H x T in mm)	520 x 26 x 88	1180 x 26 x 88
Housing	aluminium	aluminium
Scope of delivery	including sash bracket	including sash bracket
Lifespan (Open/Closed cycles)	11.000	11.000

Item code		single stay		double stay	
		stroke 100 mm	stroke 190 mm	stroke 100 mm	stroke 190 mm
	EV 1	245173	239579	245197	239597
	RAL 9016	245176	239582	245200	239600
	RAL 9005	245179	239585	245203	239603

other colours on request

Coupling angle ZV/F

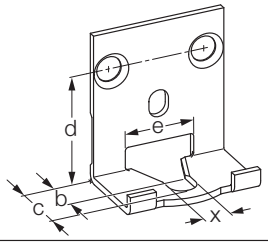

x	b	c	d	e	Item Code
8,3	10	20,5	33,5	21	243688
9,5	10	21,5	32	22	243694
11,5	10	22,5	32	23	243700
11,5	5	22,5	32	23	243706
10,7	9	22	38	23	243712
10,7	9	22	35,5	23	243718
10,7	9	22	32	23	243724

PRIMAT-E kompakt 300

Device properties

- Opening width 300 mm
- Increased contact pressure thanks to additional third locking inside the stay
- Two-stay version for wide windows
- Sash suspension with security knob
- Maintenance-free stay with anti-dirt profiling inside the stay
- Integrated limit stop and overload cutoff
- Optional drive pin in combination with additional lockings
- Compact design with low space requirements on the frame

Accessories

- Sash bracket with cap ①
- Bevel window sash bracket with cap ②
- Coupling track for additional locking ZV/F ③
- Drive track, additional for 1-stay design ④
- Drive track, additional for 2-stay design ⑤

Tools

- Jig

Range of application

For sashes made of wood, PVC, aluminium and composite material.

Suitable for ventilation systems.

Installation examples

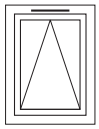

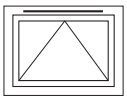

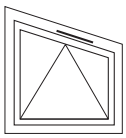

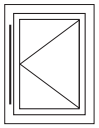

TÜV NORD
TÜV NORD CERT GmbH
Baumuster geprüft

①

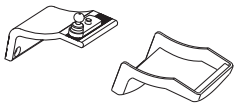

②

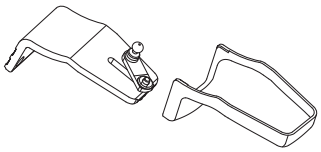

③

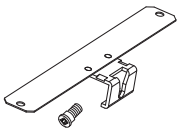

④

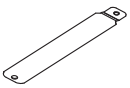

⑤

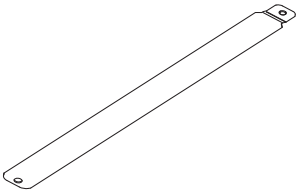

PRIMAT-E kompakt 300

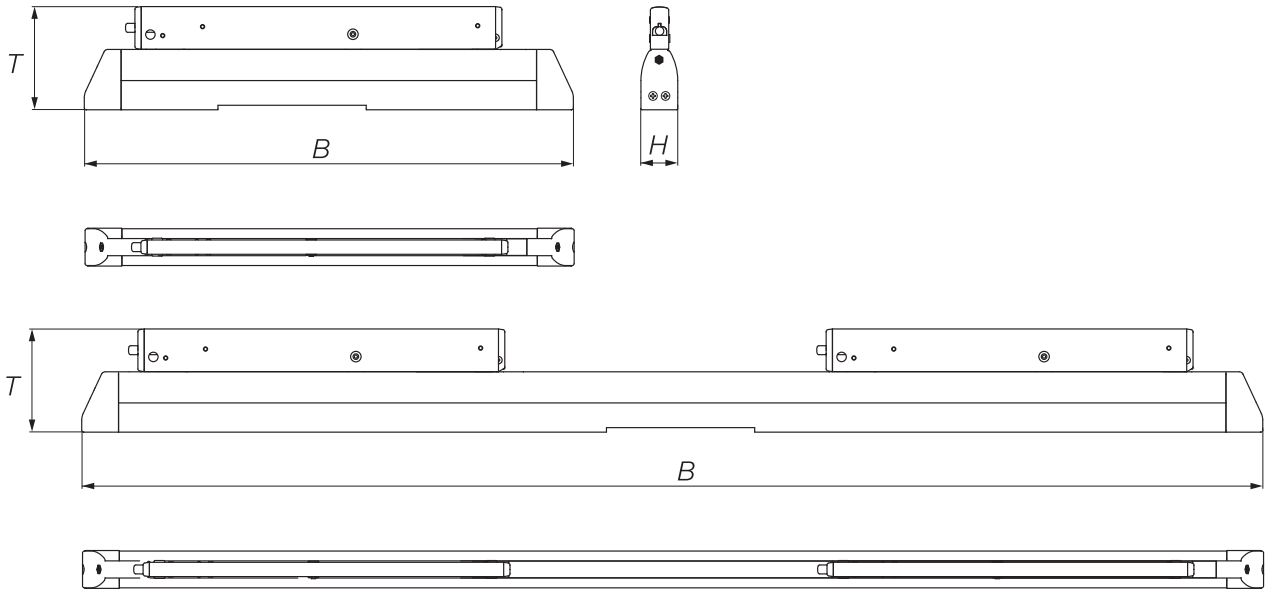

Technical specifications

PRIMAT-E kompakt 300	single stay	double stay
Rated voltage (V)	230	230
Voltage tolerance range (%)	-10 / +10	-10 / +10
Current consumption (A)	0,06	0,06
Compressive force (N)	80	80
Tractive force (N)	80	80
Locking force (N)	1500	3000
Stroke/opening width (in mm)	300	300
Opening mechanism	stay	stay
Running period	50s	50s
Duty cycle	60s on / 60s off	60s on / 60s off
Ambient temperature	0 °C to +70 °C	0 °C to +70 °C
Protection class	IP40	IP40
Cutoff open	limit switch	limit switch
Cutoff closed	limit switch	limit switch
Connection technology	plug-in screw terminal, max. 1 mm^2	
Dimensions (B x H x T in mm)	512 x 36 x 100	1210 x 36 x 100
Housing	aluminium	aluminium
Scope of delivery	including sash bracket	including sash bracket
Lifespan (Open/Closed cycles)	10.000	10.000

Item code

EV 1	193953	193962
RAL 9016	193956	193965
RAL 9005	193959	193968

other strokes on request

Item code accessories	RAL 7035	RAL 9016	RAL 9005
Sash bracket with cap	195104	190462	190465
Bevel window sash bracket with cap	195107	184452	184455
Coupling track for additional locking ZV/F	Measure x = 8,3 mm		179608
	Measure x = 9,5 mm		179611
	Measure x = 11,5 mm		185188
Drive track, additional for single stay design			192904
Drive track, additional for ZV/F with 2-stay design			192910

PRIMAT-E kompakt A

Device properties

- Opening width 95 - 190 mm adjustable
- Increased contact pressure thanks to integrated locking
- Single, double, triple version
- Integrated limit stop and overload cutoff
- Compact design with low space requirements on the frame

Accessories

- Accessories sash bracket R 0-25 ①
- Accessories sash bracket R 26-50 ②
- Accessories sash bracket R 51-75 ③
- Accessories sash bracket R 76-100 ④

Range of application

For sashes made of wood, PVC, aluminium and composite material.

Suitable for ventilation systems.

Installation examples

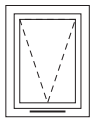

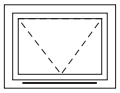

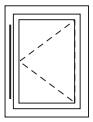

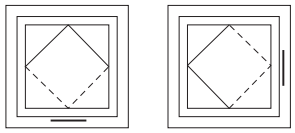

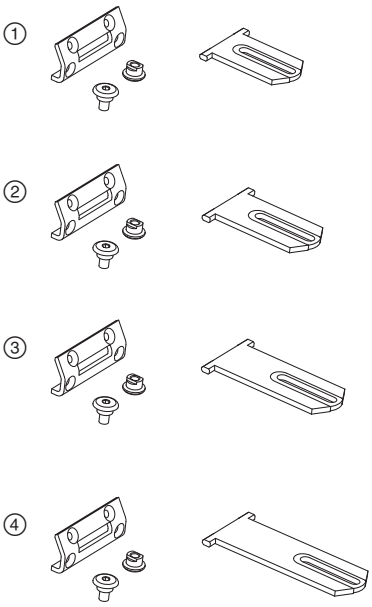

PRIMAT-E kompakt A

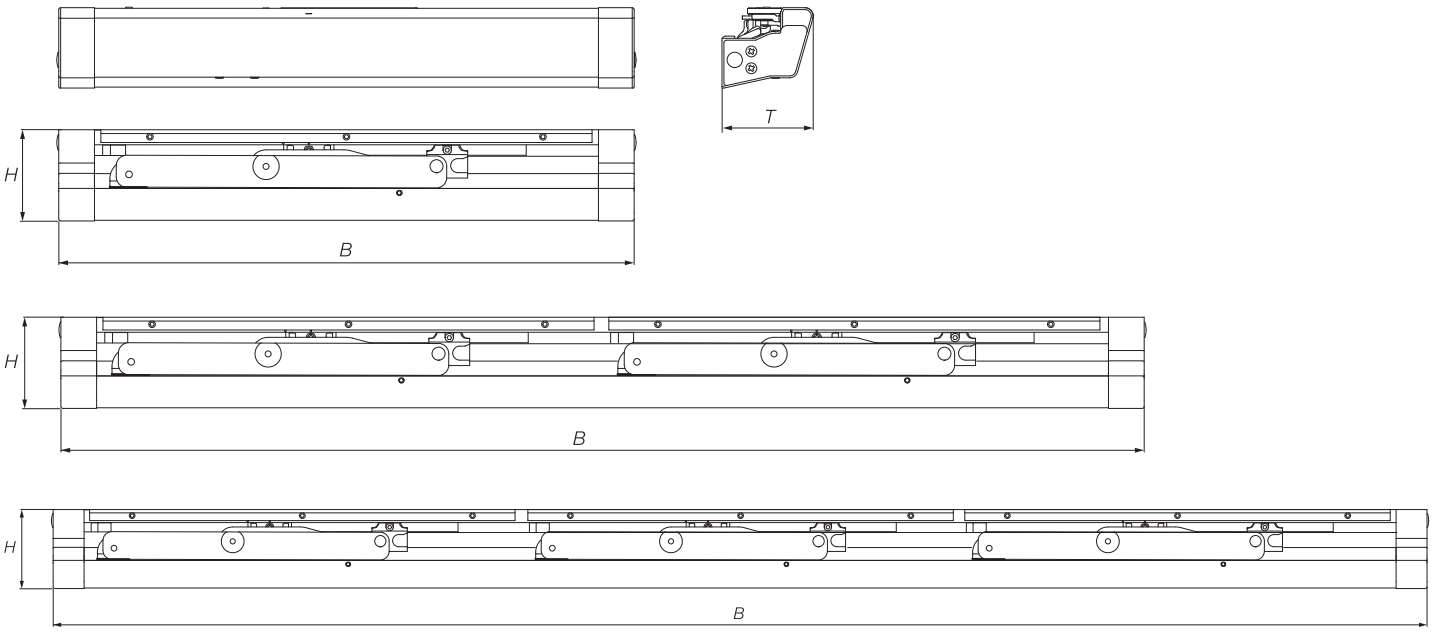

Technical specifications

PRIMAT-E kompakt A	single stay	double stay	triple stay
Rated voltage (V)	230	230	230
Voltage tolerance range (%)	-10 / +10	-10 / +10	-10 / +10
Current consumption (A)	0,06	0,06	0,06
Starting current (A)	0,1	0,1	0,1
Compressive force (N)	50	80	80
Tractive force (N)	50	80	80
Locking force (N)	8000	16.000	24.000
Stroke/opening width (in mm)	190	190	190
Opening mechanism	stay	stay	stay
Running period	40s	40s	40s
Duty cycle	60s on / 60s off	60s on / 60s off	60s on / 60s off
Ambient temperature	0 °C to +70 °C	0 °C to +70 °C	0 °C to +70 °C
Protection class	IP40	IP40	IP40
Cutoff open	limit switch	limit switch	limit switch
Cutoff open	limit switch	limit switch	limit switch
Connection technology	plug-in screw terminal, max. 1 mm^2		
Dimensions (B x H x T in mm)	452 x 72 x 63 **(FB 450-1,000)**	1001 x 72 x 63 **(FB 1001-1500)** 1501 x 72 x 63 **(FB 1501-2000)**	2001 x 72 x 63 **(FB 2001-2500)** 2501 x 72 x 63 **(FB 2501-3000)**
Housing	aluminium	aluminium	aluminium
Scope of delivery	without sash bracket	without sash bracket	without sash bracket
Lifespan (Open/Closed cycles)	10.000	10.000	10.000

Item code

EV 1	200269 **(FB 450-1000)**	203010 **(FB 1001-1500)** 206386 **(FB 1501-2000)**	203028 **(FB 2001-2500)** 206404 **(FB 2501-3000)**
RAL 9016	200272 **(FB 450-1000)**	203013 **(FB 1001-1500)** 206389 **(FB 1501-2000)**	203031 **(FB 2001-2500)** 206407 **(FB 2501-3000)**
RAL 9005	200275 **(FB 450-1000)**		

other strokes on request

Item code accessories

Accessories sash bracket R 0-25	200200
Accessories sash bracket R 26-50	200203
Accessories sash bracket R 51-75	200206

Order matrix ZV/F-URZ for SVA 18 / PRIMAT kompakt 300

			FB 440 - 620					FB 621 - 720						FB 721 - 1200					
			FH 500 - 700	FH 701 - 1100	FH 1101 - 1500	FH 1501 - 1900	FH 1901 - 2400	FH 300 - 500	FH 501 - 700	FH 701 - 1100	FH 1101 - 1500	FH 1501 - 1900	FH 1901 - 2400	FH 300 - 500	FH 501 - 700	FH 701 - 1100	FH 1101 - 1500	FH 1501 - 1900	FH 1901 - 2400
Bag of additional lockings PRIMAT kompakt ZV/F-URZ measure x = 8,3 mm		179608	1	1	1	1	1	1	1	1	1	1	1	1	1	1	1	1	1
Drive track for PRIMAT kompakt 300, 1-stay		192904	-	-	-	-	-	-	-	-	-	-	-	1	1	1	1	1	1
Drive track for PRIMAT kompakt 300, 2-stay		192910	-	-	-	-	-	-	-	-	-	-	-	-	-	-	-	-	-
Connecting rod ZV/F		221190	1	1	1	1	1	1	1	1	1	1	1	-	-	-	-	-	-
		221196	-	-	-	-	-	-	-	-	-	-	-	1	1	1	1	1	1
		221199	-	-	-	-	-	-	-	-	-	-	-	-	-	-	-	-	-
		221202	-	-	-	-	-	-	-	-	-	-	-	-	-	-	-	-	-
		221205	-	-	-	-	-	-	-	-	-	-	-	-	-	-	-	-	-
Linkage without cam		175980	-	-	-	-	-	-	-	-	-	-	-	-	-	-	-	-	-
Central locking		221232	-	2	-	-	-	-	-	-	-	-	-	-	-	-	-	-	-
		221235	-	-	2	-	-	-	-	-	2	-	-	-	-	-	2	-	-
		221238	-	-	-	2	-	-	-	-	-	2	-	-	-	-	-	2	-
		221241	-	-	-	-	2	-	-	-	-	-	2	-	-	-	-	-	2
Linkage 200		217668	1	-	-	-	-	-	-	-	-	-	-	-	-	-	-	-	-
Linkage 400		227959	-	-	-	-	-	-	-	2	2	2	2	-	-	2	2	2	2
End locking		215571	-	-	-	-	-	2	-	-	-	-	-	2	-	-	-	-	-
Corner		215598	2	2	2	2	2	-	2	2	2	2	2	-	2	2	2	2	2
Corner ES 2 (optional design RC2 + SKG)		215595	2	2	2	2	2	2	2	2	2	2	2	2	2	2	2	2	2
Striker standard		***	2	4	4	4	4	2	2	4	6	6	6	2	2	4	6	6	6
Security striker (optional design RC2 + SKG)*		***	2	6	6	6	6	2	4	6	8	8	8	2	4	6	8	8	8
KSP size 1	1 pair	140927	-	-	-	-	-	1	-	-	-	-	-	1	-	-	-	-	-
KSP size 2	1 pair	140930	-	-	-	-	-	-	-	-	-	-	-	-	-	-	-	-	-
KSP size 2	right or left	117452 / 117470	1	-	-	-	-	-	-	-	-	-	-	-	-	-	-	-	-
Restrictor 113, Spw. 250 mm	left	159630	-	1**	1	1	1	-	1	1	1	1	1	-	1	1	1	1	1
Restrictor 113, Spw. 250 mm	right	159627	-	-	1	1	1	-	1	1	1	1	1	-	1	1	1	1	1
Restrictor 113, Spw. 300 mm****	left	196706	-	1**	1	1	1	-	1	1	1	1	1	-	1	1	1	1	1
Restrictor 113, Spw. 300 mm****	right	196703	-	-	1	1	1	-	1	1	1	1	1	-	1	1	1	1	1

Note:
* Max. 6 strikers with sash pressure (at side), on top restrictors, surplus security strikers without sash pressure!
** socket 10,0 x 10,2 necessary
*** see list (Internet)
**** Mounting PRIMAT kompakt 300 always use restrictor 113 Spw. 300 mm
op = optional; Spw. = span width; FB = sash width; FH = sash height

FB 1201 - 1600						FB 1601 - 2000						FB 2001 - 2400						FB 2401 - 2800						bevel wind.		
FH 300 - 500	FH 501 - 700	FH 701 - 1100	FH 1101 - 1500	FH 1501 - 1900	FH 1901 - 2400	FH 300 - 500	FH 501 - 700	FH 701 - 1100	FH 1101 -1500	FH 1501 - 1900	FH 1901 - 2400	FH 300 - 500	FH 501 - 700	FH 701 - 1100	FH 1101 - 1500	FH 1501 - 1900	FH 1901 - 2400	FH 300 - 500	FH 501 - 700	FH 701 - 1100	FH 1101 - 1500	FH 1501 - 1900	FH 1901 - 2400	Bs 720 - 1200	Bs 1201 - 1600	Bs 1601 - 2000
1	1	1	1	1	1	1	1	1	1	1	1	1	1	1	1	1	1	1	1	1	1	1	1	1	1	1
1	1	1	1	1	1	-	-	-	-	-	-	-	-	-	-	-	-	-	-	-	-	-	-	1	1	1
op	op	op	op	op	op	1	1	1	1	1	1	1	1	1	1	1	1	1	1	1	1	1	1	-	-	-
-	-	-	-	-	-	-	-	-	-	-	-	-	-	-	-	-	-	-	-	-	-	-	-	-	-	-
-	-	-	-	-	-	-	-	-	-	-	-	-	-	-	-	-	-	-	-	-	-	-	-	1	-	-
1	1	1	1	1	1	-	-	-	-	-	-	-	-	-	-	-	-	-	-	-	-	-	-	-	1	-
-	-	-	-	-	-	1	1	1	1	1	1	-	-	-	-	-	-	-	-	-	-	-	-	-	-	1
-	-	-	-	-	-	-	-	-	-	-	-	1	1	1	1	1	1	1	1	1	1	1	1	-	-	-
-	-	-	-	-	-	-	-	-	-	-	-	-	-	-	-	-	-	2	2	2	2	2	2	-	-	-
-	-	-	-	-	-	-	-	-	-	-	-	-	-	-	-	-	-	-	-	-	-	-	-	-	-	-
-	-	-	2	-	-	-	-	-	2	-	-	-	-	-	2	-	-	-	-	-	2	-	-	-	-	-
-	-	-	-	2	-	-	-	-	-	2	-	-	-	-	-	2	-	-	-	-	-	2	-	-	-	-
-	-	-	-	-	2	-	-	-	-	-	2	-	-	-	-	-	2	-	-	-	-	-	2	-	-	-
-	-	-	-	-	-	-	-	-	-	-	-	-	-	-	-	-	-	-	-	-	-	-	-	-	-	-
-	-	2	2	2	2	-	-	2	2	2	2	-	-	2	2	2	2	-	-	2	2	2	2	-	-	-
2	-	-	-	-	-	2	-	-	-	-	-	2	-	-	-	-	-	2	-	-	-	-	-	2	2	2
-	2	2	2	2	2	-	2	2	2	2	2	-	2	2	2	2	2	-	2	2	2	2	2	-	-	-
2	2	2	2	2	2	2	2	2	2	2	2	2	2	2	2	2	2	2	2	2	2	2	2	-	-	-
2	3	5	5	6	6	2	4	6	6	6	6	3	4	6	6	6	6	3	4	6	6	6	6	2	2	3
2	5	7	7	9	9	2	6	8	10	10	10	3	6	8	10	10	10	3	6	8	10	10	10	-	-	-
1	-	-	-	-	-	1	-	-	-	-	-	1	-	-	-	-	-	1	-	-	-	-	-	-	-	-
-	-	-	-	-	-	-	-	-	-	-	-	-	-	-	-	-	-	-	-	-	-	-	-	-	-	-
-	-	-	-	-	-	-	-	-	-	-	-	-	-	-	-	-	-	-	-	-	-	-	-	-	-	-
-	1	1	1	1	1	-	1	1	1	1	1	-	1	1	1	1	1	-	1	1	1	1	1	op	op	op
-	1	1	1	1	1	-	1	1	1	1	1	-	1	1	1	1	1	-	1	1	1	1	1	op	op	op
-	1	1	1	1	1	-	1	1	1	1	1	-	1	1	1	1	1	-	1	1	1	1	1	op	op	op
-	1	1	1	1	1	-	1	1	1	1	1	-	1	1	1	1	1	-	1	1	1	1	1	op	op	op

Order matrix ZV/F-URZ for PRIMAT kompakt 195 single and double stay

			1stay											
			FB 721 - 1200						FB 1201 - 1600					
			FH 300 - 500	FH 501 - 700	FH 701 - 1100	FH 1101 - 1500	FH 1501 - 1900	FH 1901 - 2400	FH 300 - 500	FH 501 - 700	FH 701 - 1100	FH 1101 -1500	FH 1501 - 1900	FH 1901 - 2400
Coupling angle PRIMAT kompakt 195 ZV/F-URZ measure x = 8,3 mm		243688	1	1	1	1	1	1	1	1	1	1	1	1
Cover piece ZV/F PKO double stay (75)		243562	-	-	-	-	-	-	-	-	-	-	-	-
Connecting rod ZV/F		221193	-	-	-	-	-	-	-	-	-	-	-	-
		221196	1	1	1	1	1	1	-	-	-	-	-	-
		221199	-	-	-	-	-	-	1	1	1	1	1	1
		221202	-	-	-	-	-	-	-	-	-	-	-	-
		221205	-	-	-	-	-	-	-	-	-	-	-	-
Linkage 400 HKS Z		207705	-	-	-	-	-	-	-	-	-	-	-	-
Central locking		221232	-	-	-	-	-	-	-	-	-	-	-	-
		221235	-	-	-	2	-	-	-	-	-	2	-	-
		221238	-	-	-	-	2	-	-	-	-	-	2	-
		221241	-	-	-	-	-	2	-	-	-	-	-	2
Linkage 400		227959	-	-	2	2	2	2	-	-	2	2	2	2
End locking		215571	2	-	-	-	-	-	2	-	-	-	-	-
Corner		215598	-	2	2	2	2	2	-	2	2	2	2	2
Corner ES 2 (optional design RC2 + SKG)		215595	2	2	2	2	2	2	2	2	2	2	2	2
Striker standard		**	2	2	4	6	6	6	2	2	4	6	6	6
Security striker (optional design RC2 + SKG)*		**	2	4	6	8	8	8	2	4	6	8	8	8
KSP size 1	1 pair	140927	1	-	-	-	-	-	1	-	-	-	-	-
KSP size 2	1 pair	140930	-	-	-	-	-	-	-	-	-	-	-	-
KSP size 2	right or left	117452 / 117470	-	-	-	-	-	-	-	-	-	-	-	-
Restrictor 113, Spw. 250 mm	left	159630	-	1	1	1	1	1	-	1	1	1	1	1
Restrictor 113, Spw. 250 mm	right	159627	-	1	1	1	1	1	-	1	1	1	1	1
Restrictor 113, Spw. 300 mm	left	196706	-	1	1	1	1	1	-	1	1	1	1	1
Restrictor 113, Spw. 300 mm	right	196703	-	1	1	1	1	1	-	1	1	1	1	1

Note:
* Max. 6 strikers with sash pressure at side and on top, 8 strikers at FH>2400 mm (ZV/F devided and contrarotating), surplus security strikers without sash pressure!
** see list (Internet)
op = optional; Spw. = span width; FB = sash width; FH = sash height

HAUTAU

2stay												2stay ZV devided						only 1stay		
FB 1601 - 2000						FB 2001 - 2400						FB 2401 - 2800						bevel wind.		
FH 300 - 500	FH 501 - 700	FH 701 - 1100	FH 1101 - 1500	FH 1501 - 1900	FH 1901 - 2400	FH 300 - 500	FH 501 - 700	FH 701 - 1100	FH 1101 -1500	FH 1501 - 1900	FH 1901 - 2400	FH 300 - 500	FH 501 - 700	FH 701 - 1100	FH 1101 - 1500	FH 1501 - 1900	FH 1901 - 2400	FBs 720 - 1200	FBs 1201 - 1600	FBs 1601 - 2000
1	1	1	1	1	1	1	1	1	1	1	1	2	2	2	2	2	2	1	1	1
-	-	-	-	-	-	-	-	-	-	-	-	1	1	1	1	1	1	-	-	-
-	-	-	-	-	-	-	-	-	-	-	-	2	2	2	2	2	2	-	-	-
-	-	-	-	-	-	-	-	-	-	-	-	-	-	-	-	-	-	1	-	-
-	-	-	-	-	-	-	-	-	-	-	-	-	-	-	-	-	-	-	1	-
1	1	1	1	1	1	-	-	-	-	-	-	-	-	-	-	-	-	-	-	1
-	-	-	-	-	-	1	1	1	1	1	1	-	-	-	-	-	-	-	-	-
-	-	-	-	-	-	-	-	-	-	-	-	2	2	2	2	2	2	-	-	-
-	-	-	-	-	-	-	-	-	-	-	-	-	-	-	-	-	-	-	-	-
-	-	-	2	-	-	-	-	-	2	-	-	-	-	-	2	-	-	-	-	-
-	-	-	-	2	-	-	-	-	-	2	-	-	-	-	-	2	-	-	-	-
-	-	-	-	-	2	-	-	-	-	-	2	-	-	-	-	-	2	-	-	-
-	-	2	2	2	2	-	-	2	2	2	2	-	-	2	2	2	2	-	-	-
2	-	-	-	-	-	2	-	-	-	-	-	2	-	-	-	-	-	2	2	2
-	2	2	2	2	2	-	2	2	2	2	2	-	2	2	2	2	2	-	-	-
2	2	2	2	2	2	2	2	2	2	2	2	2	2	2	2	2	2	-	-	-
2	4	4	6	6	6	3	4	6	6	6	6	3	4	6	8	8	8	2	2	3
2	6	6	8	10	10	3	6	8	10	10	10	3	6	8	10	10	10	-	-	-
1	-	-	-	-	-	1	-	-	-	-	-	1	-	-	-	-	-	-	-	-
-	-	-	-	-	-	-	-	-	-	-	-	-	-	-	-	-	-	-	-	-
-	-	-	-	-	-	-	-	-	-	-	-	-	-	-	-	-	-	-	-	-
-	1	1	1	1	1	-	1	1	1	1	1	-	1	1	1	1	1	op	op	op
-	1	1	1	1	1	-	1	1	1	1	1	-	1	1	1	1	1	op	op	op
-	1	1	1	1	1	-	1	1	1	1	1	-	1	1	1	1	1	op	op	op
-	1	1	1	1	1	-	1	1	1	1	1	-	1	1	1	1	1	op	op	op

Notes

Would you like everything from a single source?

HAUTAU, a specialist in sliding products, is part of the MACO Group. At MACO you get complete solutions for your large surfaces, windows and doors – for timber, PVC and aluminium: Experience our versatile system range, with comprehensive service included. Discover more on **www.maco.eu** and **www. hautau.de** or contact your customer advisor.

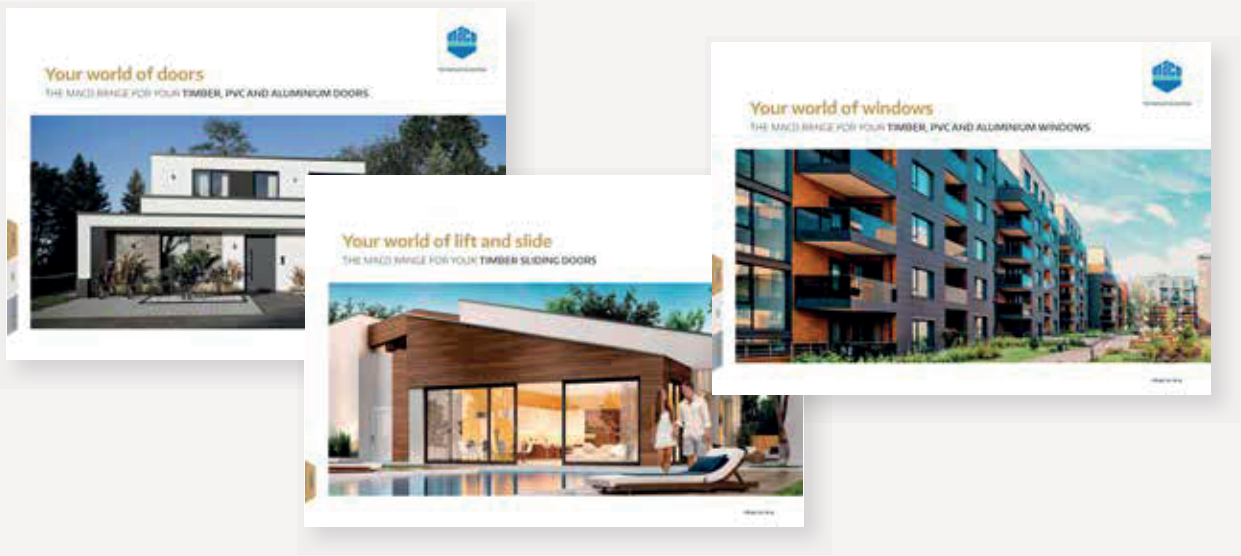

HAUTAU near you:
www.hautau.de/contact

HAUTAU, a MACO Group company

HAUTAU

This print document is constantly being revised.
The latest version can be found under https://webdoc.hautau.de/download/34226
or by scanning the QR code.

Created: 03/2024
Order No. 166787
All rights and amendments reserved.